1116

AIWA®

S/M Code No. 86-036
DATE OF ISSUE 7/1986-Z

SERVICE MANUAL

TYPE. Y

This service manual contains service information for only altered and added sections of Model CT-X300II, Z350, X400II, Z450, X500II, Z550. If requiring other service information, see the service manual of Model CT-X300, X400, X500.

STEREO CASSETTE
CAR RECEIVER

MODEL NO.

CT-X300II
CT-Z350

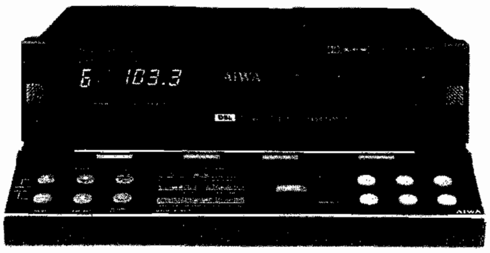

STEREO CASSETTE
CAR RECEIVER

MODEL NO.

CT-X400II
CT-Z450

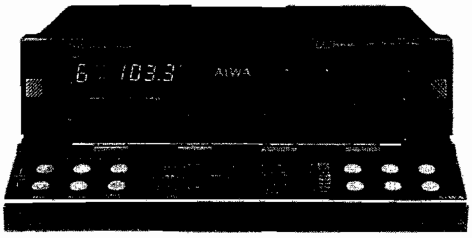

STEREO CASSETTE
CAR RECEIVER

MODEL NO.

CT-X500II
CT-Z550

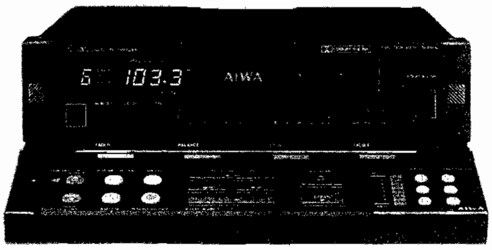

1116

SPECIFICATIONS

CT-X300II/X400II/X500II

〈FM SECTION〉

Frequency Range:	87.9 Mz–107.9 MHz
Usable Sensitivity:	14.2 dBf (1.4 μV)
50dB Quieting Sensitivity:	19.7 μV
IF Rejection:	75 dB
Frequency Response:	30 Hz–15,000Hz
S/N Ratio:	65 dB
Stereo Separation:	35 dB at 1 kHz
Alternate Channel Selectivity:	70 dB
Capture Ratio:	2 dB

〈AM SECTION〉

Frequency Range:	530 kHz–1,620 kHz
Usable Sensitivity:	30 dB (30 μV)

〈TAPE SECTION〉

Wow and Flutter:	0.12% (WRMS)
Tape Speed:	4.8 cm/sec. (1-7/8 ips)
S/N Ratio (METAL):	Dolby off 54 dB Dolby B on 64 dB Dolby C on 71 dB (CT-X500II)
Frequency Response:	40 Hz–15,000 Hz (NORMAL) 40 Hz–16,000 Hz (METAL)
Stereo Separation:	40 dB
FF/REW Time:	100 sec.

〈AUDIO SECTION〉

Max. Power Output:	8 W per channel
Continuous Average Power Output:	4.4 W per channel 150–17,000 Hz at THD 0.8%

〈GENERAL〉

Power Supply Voltage:	14.4 V (10.8 to 15.6 V allowable), DC, negative ground
Load Impedance:	4 Ω
Tone Control:	Bass ±10 dB at 100 Hz Treble ±10 dB at 10 kHz
Pre-amp. Output Voltage:	700 mV (MAX.)
Instration Sleeve Size:	182(W)×53(H)×170.5(D) mm (7-1/4″×2-1/8″×6-3/4″)
Weight:	2.3 kg (5.1 lbs)

CT-Z350/Z450/Z550

〈FM SECTION〉

Frequency Range:	87.9 Mz–107.9 MHz
Usable Sensitivity:	14.2 dBf
50dB Quieting Sensitivity:	17.2 dBf
IF Rejection:	75 dB
Frequency Response:	30–15,000 Hz
S/N Ratio:	65 dB
Stereo Separation:	35 dB at 1 kHz
Alternate Channel Selectivity:	70 dB
Capture Ratio:	2 dB

〈AM SECTION〉

Frequency Range:	530 kHz–1,620 kHz (Y) 522 kHz–1,611 kHz (AY)
Usable Sensitivity:	30 μV (30 dB)

〈TAPE SECTION〉

Wow and Flutter:	0.12% (WRMS)
Tape Speed:	4.8 cm/sec. (1-7/8 ips)
S/N Ratio (METAL):	Dolby off 54 dB Dolby B on 64 dB Dolby C on 71 dB (CT-Z550)
Frequency Response:	40 Hz–15,000 Hz (NORMAL) 40 Hz–16,000 Hz (METAL)
Stereo Separation:	40 dB
FF/REW Time:	100 sec.

〈AUDIO SECTION〉

Max. Power Output:	8 W per channel
Continuous Average Power Output:	4.4 W per channel 150–17,000 Hz at THD 0.8%

〈GENERAL〉

Power Supply Voltage:	14.4 V (10.8 to 15.6 V allowable), DC, negative ground
Load Impedance:	4 Ω
Tone Control:	Bass ±10 dB at 100 Hz Treble ±10 dB at 10 kHz
Pre-amp. Output Voltage:	700 mV (MAX.)
Instration Sleeve Size:	182(W)×53(H)×170.5(D) mm (7-1/4″×2-1/8″×6-3/4″)
Weight:	2.3 kg (5.1 lbs.)

- Design and specifications are subject to change without notice.
- Noise reduction system manufactured under license from Dolby Laboratories Licensing Corporation.
- Dolby and the DD symbol are trademarks of Dolby Laboratories Licensing Corporation.

Read model number and connector destination as follows;
CT-X500MKII=CT-Z550
CT-X400MKII=CT-Z450
CT-X300MKII=CT-Z350

ELECTRICAL MAIN PARTS LIST (CT-X300II/Z350, CT-X400II/Z450, CT-X500II/Z550)

Ref. No.	Part No.	Description
=== IC ===		
	87-027-629	IC,4558DX
	87-027-955	IC,AN7168
	87-020-273	IC,BA337
	87-020-274	IC,BA3406L
	82-685-509	IC,HALL
	87-020-724	IC,HYBRID HMPX-007
	87-020-275	IC,HYBRID KN-003
	87-027-690	IC,IR2E02 (EXCEPT CT-X300MKII)
	87-020-725	IC,L78N08
	82-776-161	IC,LA1140
	87-020-335	IC,LC7530 (EXCEPT CT-X300MKII)
	87-020-701	IC,M4013BP (EXCEPT CT-X500MKII)
	87-020-705	IC,M4027
	87-020-096	IC,M4066BP (CT-X500MKII ONLY)
	87-020-533	IC,M4069UBP (EXCEPT CT-X300MKII)
	87-027-948	IC,M54514AP
	87-027-840	IC,M54519P
	87-020-726	IC,M5278L56
	87-027-885	IC,TA7341P (EXCEPT CT-X300MKII)
	87-020-272	IC,TA7630
	87-020-281	IC,TC9148P (CT-X500MKII ONLY)
	87-020-280	IC,TC9150P (CT-X500MKII ONLY)
	87-020-333	IC,TD62003AP-STA
	87-020-171	IC,TD62506P-STA
	87-027-752	IC,UPB553AC
	87-027-826	IC,UPC1373H (CT-X500MKII ONLY)
	87-020-282	IC,UPD1710G-016
=== TRANSISTOR ===		
	89-502-080	FET,2SK208(Y)
	89-503-305	FET,2SK330(GR)(CT-X500MKII ONLY)
	87-026-237	TRANSISTOR,DTC124XK
	87-026-260	TRANSISTOR,RN1403
	87-026-261	TRANSISTOR,RN1404
	87-026-262	TRANSISTOR,RN1407
	87-026-263	TRANSISTOR,RN1410
	87-026-264	TRANSISTOR,RN1411
	87-026-265	TRANSISTOR,RN2403
	87-026-266	TRANSISTOR,RN2404
	87-026-267	TRANSISTOR,RN2407
	87-026-268	TRANSISTOR,RN2411
	89-108-854	TRANSISTOR,2SA885 R
	89-111-624	TRANSISTOR,2SA1162Y(TE-85R)
	89-111-824	TRANSISTOR,2SA1182(Y)
	89-209-473	TRANSISTOR,28B946 Q
	89-318-464	TRANSISTOR,2SC1846 R
	89-327-124	TRANSISTOR,2SC2712 Y
	89-333-264	TRANSISTOR,2SC3326(B)
=== MAIN CIRCUIT BOARD SECTION(CT-X500MKII ONLY) ===		
PCB-A	84-415-601	MAIN CIRCUIT BOARD
C101	★ 87-010-075	CAP,ELECT 10-16
C103	★ 87-010-075	CAP,ELECT 10-16
C104	★ 87-015-819	CAP,CHIP 0.01
C105	★ 87-015-819	CAP,CHIP 0.01
C106	★ 87-010-075	CAP,ELECT 10-16
C107	★ 87-010-425	CAP,CHIP 0.22
C108	★ 87-010-075	CAP,ELECT 10-16
C109	★ 87-010-076	CAP,ELECT 22-6.3
C110	★ 87-010-074	CAP,ELECT 4.7-35
C111	★ 87-010-425	CAP,CHIP 0.22
C112	★ 87-015-835	CAP,CHIP 0.047D,M
C201	★ 87-015-627	CAP,CHIP 1000P
C202	★ 87-015-627	CAP,CHIP 1000P
C203	★ 87-010-070	CAP,ELECT 0.47-50
C204	★ 87-010-070	CAP,ELECT 0.47-50
C205	★ 87-010-115	CAP,ELECT 100-4
C206	★ 87-010-115	CAP,ELECT 100-4
C207	★ 87-015-883	CAP,CHIP 0.022
C208	★ 87-015-883	CAP,CHIP 0.022
C209	★ 87-015-947	CAP,CHIP 0.018
C210	★ 87-015-947	CAP,CHIP 0.018
C211	★ 87-010-071	CAP,ELECT 1-50
C212	★ 87-010-071	CAP,ELECT 1-50
C213	★ 87-010-070	CAP,ELECT 0.47-50
C214	★ 87-010-075	CAP,ELECT 10-16
C215	★ 87-010-075	CAP,ELECT 10-16
C216	★ 87-010-234	CAP,ELECT 47-16 5L
C217	★ 87-015-819	CAP,CHIP 0.01
C218	★ 87-015-818	CAP,CHIP 4700P
C219	★ 87-015-883	CAP,CHIP 0.022
C220	★ 87-010-244	CAP,ELECT 22-16
C221	★ 87-010-076	CAP,ELECT H5 22U-6.3V
C222	★ 87-010-244	CAP,ELECT 22-16
C223	★ 87-010-072	CAP,ELECT 2.2-50
C224	★ 87-010-072	CAP,ELECT 2.2-50
C225	★ 87-010-072	CAP,ELECT 2.2-50
C226	★ 87-010-072	CAP,ELECT 2.2-50
C227	★ 87-010-381	CAP,ELECT 330-16SME
C228	★ 87-010-101	CAP,ELECT 220/16(VH)
C229	★ 87-010-101	CAP,ELECT 220/16(VH)
C230	★ 87-010-101	CAP,ELECT 220/16(VH)
C231	★ 87-015-774	CAP,CHIP 680P
C232	★ 87-015-774	CAP,CHIP 680P
C233	★ 87-010-074	CAP,ELECT 4.7-35
C234	★ 87-010-074	CAP,ELECT 4.7-35
C235	★ 87-010-074	CAP,ELECT 4.7-35
C236	★ 87-010-074	CAP,ELECT 4.7-35
C237	★ 87-015-818	CAP,CHIP 4700P
C238	★ 87-015-818	CAP,CHIP 4700P
C241	★ 87-010-072	CAP,ELECT 2.2-50
C242	★ 87-010-072	CAP,ELECT 2.2-50
C243	★ 87-010-074	CAP,ELECT 4.7-35
C244	★ 87-010-074	CAP,ELECT 4.7-35
C245	★ 87-010-381	CAP,ELECT 330-16SME
C246	★ 87-010-234	CAP,ELECT 47-16 5L
C247	★ 87-010-074	CAP,ELECT 4.7-35
C248	★ 87-010-074	CAP,ELECT 4.7-35
C249	★ 87-010-074	CAP,ELECT 4.7-35
C250	★ 87-010-074	CAP,ELECT 4.7-35
C251	★ 87-010-244	CAP,ELECT 22-16
C252	★ 87-010-234	CAP,ELECT 47-16 5L
C253	★ 87-010-074	CAP,ELECT 4.7-35
C254	★ 87-010-074	CAP,ELECT 4.7-35
C255	★ 87-010-234	CAP,ELECT 47-16 5L
C256	★ 87-015-819	CAP,CHIP 0.01
C257	★ 87-010-071	CAP,ELECT 1-50
C258	★ 87-010-234	CAP,ELECT 47-16 5L
C259	★ 87-015-883	CAP,CHIP 0.022
C260	★ 87-015-883	CAP,CHIP 0.022
C261	★ 87-015-883	CAP,CHIP 0.022
C262	★ 87-015-883	CAP,CHIP 0.022
C263	★ 87-010-071	CAP,ELECT 1-50
C264	★ 87-010-071	CAP,ELECT 1-50
C265	★ 87-010-075	CAP,ELECT 10-16
C266	★ 87-010-075	CAP,ELECT 10-16

Ref. No.	Part No.	Description
C267	★ 87-010-069	CAP,ELECT 0.33-50
C268	★ 87-010-069	CAP,ELECT 0.33-50
C269	★ 87-010-074	CAP,ELECT 4.7-35
C270	★ 87-010-074	CAP,ELECT 4.7-35
C271	★ 87-010-075	CAP,ELECT 10-16
C272	★ 87-010-075	CAP,ELECT 10-16
C273	★ 87-010-234	CAP,ELECT 47-16
C273	★ 87-010-235	CAP,ELECT 470-16
C274	★ 87-010-075	CAP,ELECT 10-16
C275	★ 87-010-075	CAP,ELECT H5 10U-16V
C302	★ 87-010-072	CAP,ELECT H5 2.2U-50V
C303	★ 87-010-072	CAP,ELECT H5 2.2U-50V
C401	★ 87-010-074	CAP,ELECT 4.7-35
C402	★ 87-010-244	CAP,ELECT 22-16
C403	★ 87-015-819	CAP,CHIP 0.01
C404	★ 87-010-067	CAP,ELECT H5 0.1U-50V
C405	★ 87-010-234	CAP,ELECT 47-16 5L
C406	★ 87-010-425	CAP,CHIP 0.22
C407	★ 87-010-079	CAP,ELECT 100-6.3
C408	★ 87-010-371	CAP,ELECT 470-6.3SME
C409	★ 87-010-076	CAP,ELECT 22-6.3
C410	★ 87-010-425	CAP,CHIP 0.22
C411	★ 87-010-091	CAP,CHIP 22P CM
C412	★ 87-010-091	CAP,CHIP 22P CM
C413	★ 87-010-075	CAP,ELECT 10-16
C414	★ 87-010-075	CAP,ELECT 10-16
C415	★ 87-010-075	CAP,ELECT 10-16
C416	★ 87-010-425	CAP,CHIP 0.22
C417	★ 87-015-819	CAP,CHIP 0.01
C418	★ 87-010-248	CAP,ELECT 220U-10V SME
C419	★ 87-010-248	CAP,ELECT 220U-10V SME
C451	★ 87-010-067	CAP,ELECT H5 R1U-50V
C452	★ 87-014-057	CAP,PP 1000P
C453	★ 87-015-819	CAP,CHIP 0.01
C454	★ 87-015-819	CAP,CHIP 0.01
C455	★ 87-010-074	CAP,ELECT 4.7-35
C456	★ 87-015-819	CAP,CHIP 0.01
C457	★ 87-010-234	CAP,ELECT 47-16 5L
C458	★ 84-902-602	CAP,TANTALUM 4.7-16V
C459	★ 87-010-244	CAP,ELECT 22-16
C460	★ 87-010-134	CAP,ELECT 4.7-35BP
C461	★ 87-010-425	CAP,CHIP 0.22
C462	★ 87-015-835	CAP,CHIP 0.047D,M
C463	★ 87-015-835	CAP,CHIP 0.047D,M
C464	★ 87-010-075	CAP,ELECT 10-16
C465	★ 87-010-074	CAP,ELECT 4.7-35
D101	87-020-027	DIODE,CHIP 1SS184
D102	87-020-027	DIODE,CHIP 1SS184
D103	87-020-027	DIODE,CHIP 1SS184
D104	87-020-027	DIODE,CHIP 1SS184
D201	87-020-027	DIODE,CHIP 1SS184
D202	87-020-027	DIODE,CHIP 1SS184
D203	87-020-339	DIODE,CHIP 1SS226
D204	★ 87-027-633	DIODE,ZENER HZ9A2
D205	87-020-027	DIODE,CHIP 1SS184
D206	87-020-027	DIODE,CHIP 1SS184
D207	87-020-339	DIODE,CHIP 1SS226
D208	87-020-339	DIODE,CHIP 1SS226
D209	87-020-339	DIODE,CHIP 1SS226
D210	87-020-339	DIODE,CHIP 1SS226
D211	87-020-027	DIODE,CHIP 1SS184
D212	87-020-027	DIODE,CHIP 1SS184
D213	87-020-339	DIODE,CHIP 1SS226
D215	87-027-097	DIODE 1S1555
D216	87-027-097	DIODE 1S1555
D301	87-020-027	DIODE,CHIP 1SS184
D302	87-020-339	DIODE,CHIP 1SS226
D303	87-020-339	DIODE,CHIP 1SS226
D304	87-020-339	DIODE,CHIP 1SS226
D305	★ 87-027-416	DIODE,ZENER HZ3C2
D401	87-020-027	DIODE,CHIP 1SS184
D403	87-020-027	DIODE,CHIP 1SS184
D404	87-020-339	DIODE,CHIP 1SS226
D405	87-020-339	DIODE,CHIP 1SS226
D406	87-020-027	DIODE,CHIP 1SS184
D407	87-020-027	DIODE,CHIP 1SS184
D408	★ 87-027-346	DIODE,ZENER HZ11A2L
D409	★ 87-027-584	DIODE,ZENER HZ9C1L
D410	87-020-027	DIODE,CHIP 1SS184
D411	87-020-027	DIODE,CHIP 1SS184
D412	87-020-027	DIODE,CHIP 1SS184
D413	87-020-027	DIODE,CHIP 1SS184
D414	87-020-027	DIODE,CHIP 1SS184
D415	87-020-027	DIODE,CHIP 1SS184
D416	87-020-027	DIODE,CHIP 1SS184
D417	87-020-125	DIODE,CHIP 1SS181
D418	87-020-125	DIODE,CHIP 1SS188
D419	87-020-125	DIODE,CHIP 1SS181
D420	87-020-027	DIODE,CHIP 1SS184
D421	87-020-125	DIODE,CHIP 1SS181
D422	87-020-125	DIODE,CHIP1SS181
D423	★ 87-020-589	DIODE,ZENER CHIP 02CZ 9.1Y
D451	87-020-027	DIODE,CHIP 1SS184
D452	87-020-125	DIODE,1SS181
D453	87-020-339	DIODE,CHIP 1SS226
D454	87-020-339	DIODE,CHIP 1SS226
D455	87-020-027	DIODE,CHIP 1SS184
D456	87-020-125	DIODE,1SS181
D457	87-020-027	DIODE,CHIP 1SS184
D458	87-020-125	DIODE,1SS181
D459	87-020-027	DIODE,CHIP 1SS184
D460	87-020-027	DIODE,CHIP 1SS184
D461	87-020-125	DIODE,1SS181
D462	87-020-027	DIODE,CHIP 1SS184
D463	87-020-125	DIODE,1SS181
D464	87-020-027	DIODE,CHIP 1SS184
D465	87-020-125	DIODE,1SS181
D466	★ 87-027-555	DIODE,ZENER HZ5C2
D467	87-020-027	DIODE,CHIP 1SS184
D468	87-020-027	DIODE,CHIP 1SS184
D469	87-020-027	DIODE,CHIP 1SS184
D470	87-027-097	DIODE 1S1555
D471	★ 87-027-416	DIODE,ZENER HZ3C2
DSP201	★ 84-415-621	SURGE PROTECTOR DSP-201M
L201	★ 84-415-619	MICRO INDUCTOR 36MMH C
L202	★ 84-415-619	MICRO INDUCTOR 36MMH C
RA401	★ 82-685-651	RES,ARRAY 33KX4
SFR201	★ 87-021-735	SFR 220
SFR202	★ 87-021-735	SFR 220
SFR203	★ 87-021-741	SFR 4.7K
X401	84-415-611	CRYSTAL 4.5M

––– MAIN CIRCUIT BOARD SECTION (CT-X400MKII ONLY) –––

Ref. No.	Part No.	Description
PCB-B	84-416-601	MAIN CIRCUIT BOARD
C101	★ 87-010-075	CAP,ELECT 10-16
C103	★ 87-010-075	CAP,ELECT 10-16
C104	★ 87-015-819	CAP,CHIP 0.01

Ref. No.	Part No.	Description	Ref. No.	Part No.	Description
C105	★ 87-015-819	CAP,CHIP 0.01	C261	★ 87-015-883	CAP,CHIP 0.022
C106	★ 87-010-075	CAP,ELECT 10-16	C262	★ 87-015-883	CAP,CHIP 0.022
C107	★ 87-010-425	CAP,CHIP 0.22	C263	★ 87-010-071	CAP,ELECT 1-50
C108	★ 87-010-075	CAP,ELECT 10-16	C264	★ 87-010-071	CAP,ELECT 1-50
C109	★ 87-010-076	CAP,ELECT 22-6.3	C265	★ 87-010-075	CAP,ELECT 10-16
C110	★ 87-010-074	CAP,ELECT 4.7-35	C266	★ 87-010-075	CAP,ELECT 10-16
C111	★ 87-010-425	CAP,CHIP 0.22	C267	★ 87-010-069	CAP,ELECT 0.33-50
C112	★ 87-015-835	CAP,CHIP 0.047D,M	C268	★ 87-010-069	CAP,ELECT 0.33-50
C201	★ 87-015-627	CAP,CHIP 1000P	C269	★ 87-010-074	CAP,ELECT 4.7-35
C202	★ 87-015-627	CAP,CHIP 1000P	C270	★ 87-010-074	CAP,ELECT 4.7-35
C203	★ 87-010-070	CAP,ELECT 0.47-50	C271	★ 87-010-075	CAP,ELECT 10-16
C302	★ 87-010-072	CAP,ELECT H5 2.2U-50V	C272	★ 87-010-075	CAP,ELECT 10-16
C204	★ 87-010-070	CAP,ELECT 0.47-50	C273	★ 87-010-234	CAP,ELECT 47-16
C205	★ 87-010-115	CAP,ELECT 100-4	C273	★ 87-010-235	CAP,ELECT 470-16
C206	★ 87-010-115	CAP,ELECT 100-4	C274	★ 87-010-075	CAP,ELECT 10-16
C207	★ 87-015-883	CAP,CHIP 0.022	C275	★ 87-010-075	CAP,ELECT H5 10U-16V
C208	★ 87-015-883	CAP,CHIP 0.022	C303	★ 87-010-072	CAP,ELECT H5 2.2U-50V
C209	★ 87-015-947	CAP,CHIP 0.018	C401	★ 87-010-074	CAP,ELECT 4.7-35
C210	★ 87-015-947	CAP,CHIP 0.018	C402	★ 87-010-244	CAP,ELECT 22-16
C211	★ 87-015-947	CAP,ELECT 0.1-50	C403	★ 87-015-819	CAP,CHIP 0.01
C212	★ 87-010-070	CAP,ELECT 0.1-50	C404	★ 87-010-067	CAP,ELECT H5 0.1U-50V
C213	★ 87-010-070	CAP,ELECT 0.47-50	C405	★ 87-010-234	CAP,ELECT 47-16 5L
C214	★ 87-010-075	CAP,ELECT 10-16	C406	★ 87-010-425	CAP,CHIP 0.22
C215	★ 87-010-075	CAP,ELECT 10-16	C407	★ 87-010-079	CAP,ELECT 100-6.3
C216	★ 87-010-234	CAP,ELECT 47-16 5L	C408	★ 87-010-371	CAP,ELECT 470-6.3SME
C217	★ 87-015-819	CAP,CHIP 0.01	C409	★ 87-010-076	CAP,ELECT 22-6.3
C218	★ 87-015-818	CAP,CHIP 4700P	C410	★ 87-010-425	CAP,CHIP 0.22
C219	★ 87-015-883	CAP,CHIP 0.022	C411	★ 87-010-091	CAP,CHIP 22P CM
C220	★ 87-010-244	CAP,ELECT 22-16	C412	★ 87-010-091	CAP,CHIP 22P CM
C221	★ 87-010-076	CAP,ELECT H5 22U-6.3V	C413	★ 87-010-075	CAP,ELECT 10-16
C222	★ 87-010-244	CAP,ELECT 22-16	C414	★ 87-010-075	CAP,ELECT 10-16
C224	★ 87-010-235	CAP,ELECT 470/16	C415	★ 87-010-075	CAP,ELECT 10-16
C225	★ 87-010-071	CAP,ELECT 1/50	C416	★ 87-010-425	CAP,CHIP 0.22
C226	★ 87-010-071	CAP,ELECT 1/50	C417	★ 87-015-819	CAP,CHIP 0.01
C227	★ 87-010-101	CAP,ELECT 220/16	C418	★ 87-010-248	CAP,ELECT 220U-10V SME
C230	★ 87-010-071	CAP,ELECT 1/50	C419	★ 87-010-248	CAP,ELECT 220U-10V SME
C231	★ 87-015-774	CAP,CHIP 680P	C450	★ 87-010-305	CAP,CHIP 470P
C232	★ 87-015-774	CAP,CHIP 680P	C451	★ 87-010-305	CAP,CHIP 470P
C233	★ 87-010-074	CAP,ELECT 4.7-35	C452	★ 87-010-075	CAP,ELECT 10/16
C234	★ 87-010-074	CAP,ELECT 4.7-35	C453	★ 87-015-819	CAP,CHIP 0.01
C235	★ 87-010-074	CAP,ELECT 4.7-35	C454	★ 87-015-819	CAP,CHIP 0.01
C236	★ 87-010-074	CAP,ELECT 4.7-35	C455	★ 87-010-074	CAP,ELECT 4.7-35
C237	★ 87-015-818	CAP,CHIP 4700P	C456	★ 87-015-819	CAP,CHIP 0.01
C238	★ 87-015-818	CAP,CHIP 4700P	C457	★ 87-010-234	CAP,ELECT 47-16 5L
C241	★ 87-010-072	CAP,ELECT 2.2-50	C458	★ 84-902-602	CAP,TANTALUM 4.7-16V
C242	★ 87-010-072	CAP,ELECT 2.2-50	C459	★ 87-010-244	CAP,ELECT 22-16
C243	★ 87-010-074	CAP,ELECT 4.7-35	C460	★ 87-010-134	CAP,ELECT 4.7-35BP
C244	★ 87-010-074	CAP,ELECT 4.7-35	C461	★ 87-010-425	CAP,CHIP 0.22
C245	★ 87-010-381	CAP,ELECT 330-16ME	C462	★ 87-015-835	CAP,CHIP 0.047D,M
C246	★ 87-010-234	CAP,ELECT 47-16 5L	C463	★ 87-015-835	CAP,CHIP 0.047D,M
C247	★ 87-010-074	CAP,ELECT 4.7-35	C464	★ 87-010-075	CAP,ELECT 10-16
C248	★ 87-010-074	CAP,ELECT 4.7-35	C465	★ 87-010-074	CAP,ELECT 4.7-35
C249	★ 87-010-074	CAP,ELECT 4.7-35	C466	★ 87-010-305	CAP,CHIP 470P
C250	★ 87-010-074	CAP,ELECT 4.7-35	C467	★ 87-010-305	CAP,CHIP 470P
C251	★ 87-010-244	CAP,ELECT 22-16	C468	★ 87-010-425	CAP,CHIP 0.22
C252	★ 87-010-234	CAP,ELECT 47-16 5L	C469	★ 87-015-819	CAP,CHIP 0.01
C253	★ 87-010-074	CAP,ELECT 4.7-35	C470	★ 87-010-297	CAP,CHIP 100P
C254	★ 87-010-074	CAP,ELECT 4.7-35	D101	87-020-027	DIODE,CHIP 1SS184
C255	★ 87-010-234	CAP,ELECT 47-16 5L	D102	87-020-027	DIODE,CHIP 1SS184
C256	★ 87-015-819	CAP,CHIP 0.01	D103	87-020-027	DIODE,CHIP 1SS184
C257	★ 87-010-071	CAP,ELECT 1-50	D104	87-020-027	DIODE,CHIP 1SS184
C258	★ 87-010-234	CAP,ELECT 47-16 5L	D201	87-020-027	DIODE,CHIP 1SS184
C259	★ 87-015-883	CAP,CHIP 0.022	D202	87-020-027	DIODE,CHIP 1SS184
C260	★ 87-015-883	CAP,CHIP 0.022	D203	87-020-339	DIODE,CHIP 1SS226

Ref. No.	Part No.	Description
D204	★ 87-027-633	DIODE,ZENER HZ9A2
D205	87-020-027	DIODE,CHIP 1SS184
D206	87-020-027	DIODE,CHIP 1SS184
D207	87-020-339	DIODE,CHIP 1SS226
D208	87-020-339	DIODE,CHIP 1SS226
D209	87-020-339	DIODE,CHIP 1SS226
D210	87-020-339	DIODE,CHIP 1SS226
D211	87-020-027	DIODE,CHIP 1SS184
D212	87-020-027	DIODE,CHIP 1SS184
D213	87-020-339	DIODE,CHIP 1SS226
D215	87-027-097	DIODE 1S1555
D216	87-027-097	DIODE 1S1555
D301	87-020-027	DIODE,CHIP 1SS184
D302	87-020-339	DIODE,CHIP 1SS226
D303	87-020-339	DIODE,CHIP 1SS226
D304	87-020-339	DIODE,CHIP 1SS226
D305	87-027-416	DIODE,ZENER HZ3C2
D401	87-020-027	DIODE,CHIP 1SS184
D402	87-020-339	DIODE,CHIP 1SS226
D403	87-020-027	DIODE,CHIP 1SS184
D404	87-020-339	DIODE,CHIP 1SS226
D405	87-020-339	DIODE,CHIP 1SS226
D406	87-020-027	DIODE,CHIP 1SS184
D407	87-020-027	DIODE,CHIP 1SS184
D408	★ 87-027-346	DIODE,ZENER HZ11A2L
D409	★ 87-027-584	DIODE,ZENER HZ9C1L
D411	87-020-027	DIODE,CHIP 1SS184
D412	87-020-027	DIODE,CHIP 1SS184
D413	87-020-027	DIODE,CHIP 1SS184
D414	87-020-027	DIODE,CHIP 1SS184
D415	87-020-027	DIODE,CHIP 1SS184
D416	87-020-027	DIODE,CHIP 1SS184
D417	87-020-125	DIODE,CHIP 1SS181
D418	87-020-125	DIODE,CHIP 1SS188
D419	87-020-125	DIODE,CHIP 1SS181
D420	87-020-125	DIODE,CHIP 1SS181
D421	87-020-125	DIODE,CHIP 1SS181
D422	87-020-125	DIODE,CHIP 1SS181
D423	★ 87-020-589	DIODE,ZENER CHIP 02CZ 9.1Y
D451	87-020-027	DIODE,CHIP 1SS184
D452	87-020-125	DIODE,1SS181
D453	87-020-339	DIODE,CHIP 1SS226
D454	87-020-339	DIODE,CHIP 1SS226
D455	87-020-027	DIODE,CHIP 1SS184
D456	87-020-125	DIODE,1SS181
D457	87-020-027	DIODE,CHIP 1SS184
D458	87-020-125	DIODE,1SS181
D459	87-020-027	DIODE,CHIP 1SS184
D460	87-020-027	DIODE,CHIP 1SS184
D461	87-020-125	DIODE,1SS181
D462	87-020-027	DIODE,CHIP 1SS184
D463	87-020-125	DIODE,1SS181
D464	87-020-027	DIODE,CHIP 1SS184
D465	87-020-125	DIODE,1SS181
D466	★ 87-027-555	DIODE,ZENER HZ5C2
D467	87-020-027	DIODE,CHIP 1SS184
D468	87-020-027	DIODE,CHIP 1SS184
D469	87-020-027	DIODE,CHIP 1SS184
DSP201	★ 84-415-621	SURGE PROTECTOR DSP-201M
RA401	★ 82-685-651	RES,ARRAY 33KX4
SFR201	★ 87-021-735	SFR 220
SFR202	★ 87-021-735	SFR 220
SFR203	★ 87-021-741	SFR 4.7K
X401	84-415-611	CRYSTAL 4.5M

Ref. No.	Part No.	Description
=== MAIN CIRCUIT BOARD SECTION(CT-X300MKII ONLY) ===		
PCB-C	84-417-601	MAIN CIRCUIT BOARD
C101	★ 87-010-075	CAP,ELECT 10-16
C103	★ 87-010-075	CAP,ELECT 10-16
C104	★ 87-015-819	CAP,CHIP 0.01
C105	★ 87-015-819	CAP,CHIP 0.01
C106	★ 87-010-075	CAP,ELECT 10-16
C107	★ 87-010-425	CAP,CHIP 0.22
C108	★ 87-010-075	CAP,ELECT 10-16
C109	★ 87-010-076	CAP,ELECT 22-6.3
C110	★ 87-010-074	CAP,ELECT 4.7-35
C111	★ 87-010-425	CAP,CHIP 0.22
C112	★ 87-015-835	CAP,CHIP 0.047D,M
C201	★ 87-015-627	CAP,CHIP 1000P
C202	★ 87-015-627	CAP,CHIP 1000P
C203	★ 87-010-070	CAP,ELECT 0.47-50
C204	★ 87-010-070	CAP,ELECT 0.47-50
C205	★ 87-010-115	CAP,ELECT 100-4
C206	★ 87-010-115	CAP,ELECT 100-4
C207	★ 87-015-883	CAP,CHIP 0.022
C208	★ 87-015-883	CAP,CHIP 0.022
C209	★ 87-015-947	CAP,CHIP 0.018
C210	★ 87-015-947	CAP,CHIP 0.018
C211	★ 87-015-961	CAP,ELECT 0.1-50
C212	★ 87-015-961	CAP,ELECT 0.1-50
C213	★ 87-010-070	CAP,ELECT 0.47-50
C214	★ 87-010-075	CAP,ELECT 10-16
C215	★ 87-010-075	CAP,ELECT 10-16
C216	★ 87-010-234	CAP,ELECT 47-16 5L
C217	★ 87-015-819	CAP,CHIP 0.01
C223	★ 87-010-072	CAP,ELECT 2.2-50
C224	★ 87-010-072	CAP,ELECT 2.2-50
C227	★ 87-010-381	CAP,ELECT 330-16SME
C228	★ 87-010-235	CAP,ELECT 470-16
C237	★ 87-015-818	CAP,CHIP 4700P
C238	★ 87-015-818	CAP,CHIP 4700P
C241	★ 87-010-072	CAP,ELECT 2.2-50
C242	★ 87-010-072	CAP,ELECT 2.2-50
C245	★ 87-010-381	CAP,ELECT 330-16SME
C246	★ 87-010-234	CAP,ELECT 47-16 5L
C247	★ 87-010-074	CAP,ELECT 4.7-35
C248	★ 87-010-074	CAP,ELECT 4.7-35
C249	★ 87-010-074	CAP,ELECT 4.7-35
C250	★ 87-010-074	CAP,ELECT 4.7-35
C251	★ 87-010-244	CAP,ELECT 22-16
C252	★ 87-010-234	CAP,ELECT 47-16 5L
C253	★ 87-010-029	CAP,ELECT 1/50
C254	★ 87-010-029	CAP,ELECT 1/50
C259	★ 87-015-883	CAP,CHIP 0.022
C260	★ 87-015-883	CAP,CHIP 0.022
C261	★ 87-015-883	CAP,CHIP 0.022
C262	★ 87-015-883	CAP,CHIP 0.022
C263	★ 87-010-071	CAP,ELECT 1-50
C264	★ 87-010-071	CAP,ELECT 1-50
C265	★ 87-010-075	CAP,ELECT 10-16
C266	★ 87-010-075	CAP,ELECT 10-16
C267	★ 87-010-069	CAP,ELECT 0.33-50
C268	★ 87-010-069	CAP,ELECT 0.33-50
C269	★ 87-010-074	CAP,ELECT 4.7-35
C270	★ 87-010-074	CAP,ELECT 4.7-35
C271	★ 87-010-075	CAP,ELECT 10-16
C272	★ 87-010-075	CAP,ELECT 10-16
C273	★ 87-010-235	CAP,ELECT 470-16

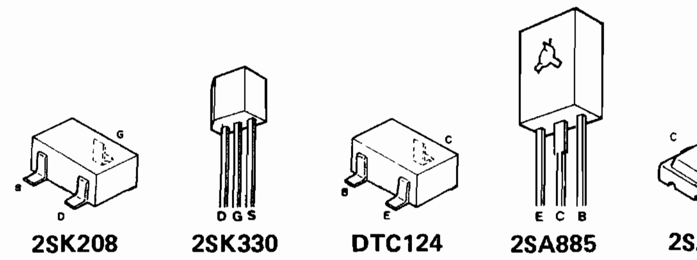

Ref. No.	Part No.	Description
C274	★ 87-010-075	CAP,ELECT 10-16
C275	★ 87-010-075	CAP,ELECT H5 10U-16V
C301	★ 87-010-234	CAP,ELECT 47-16
C302	★ 87-010-072	CAP,ELECT H5 2.2U-50V
C303	★ 87-010-072	CAP,ELECT H5 2.2U-50V
C401	★ 87-010-074	CAP,ELECT 4.7-35
C402	★ 87-010-244	CAP,ELECT 22-16
C403	★ 87-015-819	CAP,CHIP 0.01
C404	★ 87-010-067	CAP,ELECT H5 0.1U-50V
C405	★ 87-010-234	CAP,ELECT 47-16 5L
C406	★ 87-010-425	CAP,CHIP 0.22
C407	★ 76-010-079	CAP,ELECT 100-6.3
C408	★ 87-010-371	CAP,ELECT 470-6.3SME
C409	★ 87-010-076	CAP,ELECT 22-6.3
C410	★ 87-010-425	CAP,CHIP 0.22
C411	★ 87-010-091	CAP,CHIP 22P CM
C412	★ 87-010-091	CAP,CHIP 22P CM
C413	★ 87-010-075	CAP,ELECT 10-16
C414	★ 87-010-075	CAP,ELECT 10-16
C415	★ 87-010-075	CAP,ELECT 10-16
C416	★ 87-010-425	CAP,CHIP 0.22
C417	★ 87-015-819	CAP,CHIP 0.01
C418	★ 87-010-248	CAP,ELECT 220U-10V SME
C419	★ 87-010-248	CAP,ELECT 220U-10V SME
C450	★ 87-010-174	CAP,CHIP 470P
C451	★ 87-010-174	CAP,CHIP 470P
C452	★ 87-010-075	CAP,ELECT 10-16V
C453	★ 87-015-819	CAP,CHIP 0.01
C454	★ 87-015-819	CAP,CHIP 0.01
C455	★ 87-010-074	CAP,ELECT 4.7-35
C456	★ 87-015-819	CAP,CHIP 0.01
C457	★ 87-010-234	CAP,ELECT 47-16 5K
C458	★ 87-010-443	CAP,TANTALUM 4.7-35
C459	★ 87-010-244	CAP,ELECT 22-16
C461	★ 87-010-425	CAP,CHIP 0.22
C462	★ 87-015-835	CAP,CHIP 0.047D,M
C463	★ 87-015-835	CAP,CHIP 0.047D,M
C464	★ 87-010-075	CAP,ELECT 10-16
C465	★ 87-010-074	CAP,ELECT 4.7-35
C466	★ 87-010-174	CAP,CHIP 470P
C467	★ 87-010-174	CAP,CHIP 470P
C469	★ 87-010-178	CAP,CHIP 0.01
C470	★ 87-010-425	CAP,CHIP 0.22
D101	87-020-027	DIODE,CHIP 1SS184
D102	87-020-027	DIODE,CHIP 1SS184
D103	87-020-027	DIODE,CHIP 1SS184
D104	87-020-027	DIODE,CHIP 1SS184
D201	87-020-027	DIODE,CHIP 1SS184
D202	87-020-027	DIODE,CHIP 1SS184
D203	87-020-339	DIODE,CHIP 1SS226
D204	★ 87-027-633	DIODE,ZENER HZ9A2
D212	87-020-027	DIODE,CHIP 1SS184
D213	87-020-339	DIODE,CHIP 1SS226
D215	87-027-097	DIODE 1S1555
D216	87-027-097	DIODE 1S1555
D301	87-020-027	DIODE,CHIP 1SS184
D302	87-020-339	DIODE,CHIP 1SS226
D303	87-020-339	DIODE,CHIP 1SS226
D304	87-020-339	DIODE,CHIP 1SS226
D305	87-027-416	DIODE,ZENER HZ3C2
D401	87-020-027	DIODE,CHIP 1SS184
D402	87-020-339	DIODE,CHIP 1SS226
D403	87-020-027	DIODE,CHIP 1SS184
D404	87-020-339	DIODE,CHIP 1SS226

Ref. No.	Part No.	Description
D405	87-020-339	DIODE,CHIP 1SS226
D406	87-020-027	DIODE,CHIP 1SS184
D407	87-020-027	DIODE,CHIP 1SS184
D408	★ 87-027-346	DIODE,ZENER HZ11A2L
D409	★ 87-027-584	DIODE,ZENER HZ9C1L
D411	87-020-027	DIODE,CHIP 1SS184
D412	87-020-027	DIODE,CHIP 1SS184
D413	87-020-027	DIODE,CHIP 1SS184
D414	87-020-027	DIODE,CHIP 1SS184
D415	87-020-027	DIODE,CHIP 1SS184
D416	87-020-027	DIODE,CHIP 1SS184
D417	87-020-125	DIODE,CHIP 1SS181
D418	87-020-125	DIODE,CHIP 1SS188
D419	87-020-125	DIODE,CHIP 1SS181
D420	87-020-125	DIODE,CHIP 1SS181
D421	87-020-125	DIODE,CHIP 1SS181
D422	87-020-125	DIODE,CHIP 1SS181
D423	★ 87-020-589	DIODE,ZENER CHIP 02CZ 9.1Y
D451	87-020-027	DIODE,CHIP 1SS184
D452	87-020-125	DIODE,1SS181
D453	87-020-339	DIODE,CHIP 1SS226
D454	87-020-339	DIODE,CHIP 1SS226
D455	87-020-027	DIODE,CHIP 1SS184
D456	87-020-125	DIODE,1SS181
D457	87-020-027	DIODE,CHIP 1SS184
D458	87-020-125	DIODE,1SS181
D465	87-020-125	DIODE,1SS181
D466	★ 87-027-555	DIODE,ZENER HZ5C2
D467	87-020-027	DIODE,CHIP 1SS184
D468	87-020-027	DIODE,CHIP 1SS184
D469	87-020-027	DIODE,CHIP 1SS184
DSP201★	84-415-621	SURGE PROTECTOR DSP-201M
RA401	★ 82-685-651	RES,ARRAY 33KX4
SFR201★	87-021-735	SFR 220
SFR202★	87-021-735	SFR 220
X401	84-415-611	CRYSTAL 4.5M

=== TUNER CIRCUIT BOARD SECTION ===

Ref. No.	Part No.	Description
PCB-D	84-415-605	TUNER CIRCUIT BOARD
C1	★ 87-015-883	CAP,CHIP 0.022
C2	★ 87-015-883	CAP,CHIP 0.022
C3	★ 87-015-883	CAP,CHIP 0.022
C4	★ 87-010-425	CAP,CHIP 0.22
C05	★ 87-010-071	CAP,ELECT 1-50
C6	★ 87-015-785	CAP,CHIP 0.1
C8	★ 87-015-883	CAP,CHIP 0.022
C9	★ 87-015-883	CAP,CHIP 0.022
C10	★ 87-010-071	CAP,ELECT 1-50
C11	★ 87-010-291	CAP,CHIP 33P
C12	★ 87-010-291	CAP,CHIP 33P
C13	★ 87-010-075	CAP,ELECT 10-16
C14	★ 87-010-244	CAP,ELECT 22-16
C15	★ 87-010-074	CAP,ELECT 4.7-35
C16	★ 87-015-786	CAP,CHIP 0.0033
C17	★ 87-010-071	CAP,ELECT 1-50
C18	★ 87-010-073	CAP,ELECT 3.3-50
C19	★ 87-010-071	CAP,ELECT 1-50
C20	★ 87-010-234	CAP,ELECT 47-16 5L
C21	★ 87-015-627	CAP,CHIP 1000P
C22	★ 87-015-627	CAP,CHIP 1000P
C23	★ 87-010-234	CAP,ELECT 47-16 5L
C24	★ 87-010-234	CAP,ELECT 47-16 5L
C25	★ 87-015-883	CAP,CHIP 0.022

Ref. No.	Part No.	Description
C31	★ 87-010-234	CAP,ELECT 47-16 5L (CT-X500MKII ONLY)
C32	★ 87-015-834	CAP,CHIP 0.033 (CT-X500MKII ONLY)
C33	★ 87-010-074	CAP,ELECT 4.7-35 (CT-X500MKII ONLY)
C34	★ 87-010-075	CAP,ELECT 10-16 (CT-X500MKII ONLY)
C35	★ 87-015-629	CAP,CHIP 0.0022 B,K (CT-X500MKII ONLY)
C36	★ 87-015-627	CAP,CHIP 1000P (CT-X500MKII ONLY)
C37	★ 87-015-786	CAP,CHIP 0.0033 (CT-X500MKII ONLY)
CF1	★ 87-008-282	FILTER SFT 10.7M
D1	★ 87-020-125	DIODE,1SS181
D2	★ 87-020-125	DIODE,1SS181
L1	★ 87-005-151	COIL S 2.2UH
L2	★ 84-415-616	COIL,QUAD
L31	★ 87-003-110	COIL 5MMH S (CT-X500MKII ONLY)
SFR1	★ 87-021-635	SFR 100K
SFR2	★ 87-021-672	SFR 50KB
SFR3	★ 87-021-693	SFR 5KB
SFR4	★ 87-021-672	SFR 50KB

=== DISPLAY CIRCUIT BOARD SECTION (CT-X500MKII ONLY) ===

Ref. No.	Part No.	Description
PCB-F	84-415-602	DISPLAY CIRCUIT BOARD
C601	★ 87-010-307	CAP,CHIP 680P CH
C602	★ 87-010-091	CAP,CHIP 22P CM
D601	87-020-747	PHOTO DIODE PN-313B
LED607★	87-020-268	LED GL-9PG3 (DIRECTION ◀)
LED608★	87-027-774	LED GL-9HY4 (DIRECTION M/MS)
LED609★	87-020-268	LED GL-9PG3 (DIRECTION ▶)
LED610★	87-020-267	LED UNIT 7P GL-107M12 (LEFT)
LED611★	87-020-267	LED UNIT 7P GL-107M12 (RIGHT)
LED612★	87-020-749	LED LN-513GKM (PRESET STATION)
LED613★	87-020-722	LED LN-543GK AI (FREQUENCY/TIME)
PL601	82-685-662	LAMP (CASSETTE)
PL602	82-685-662	LAMP (CASSETTE)
PL603	84-415-617	LAMP (FRONT) A
PL604	84-415-617	LAMP (FRONT) A
PL605	84-415-622	LAMP (FRONT) B
PL606	84-415-623	LAMP (FRONT) C
S601	87-020-269	TACT SW (MEMORY)
S602	87-020-269	TACT SW (LO/DX)
S603	87-020-269	TACT SW (DSL)
S604	87-020-269	TACT SW (METAL/NORMAL)
S605	87-020-269	TACT SW (DOLBY NR B)
S606	87-020-270	TACT SW (DOLBY NR C)
VL601	82-685-612	SLIDE VOLUME 10K(B)(TREBLE)
VL602	82-685-612	SLIDE VOLUME 10K(B)(BASS)
VL603	82-685-612	SLIDE VOLUME 10K(B)(BALANCE)
VL604	82-685-613	SLIDE VOLUME 100K (FADER)

=== DISPLAY CIRCUIT BOARD SECTION(CT-X400MKII ONLY) ===

Ref. No.	Part No.	Description
PCB-G	84-416-602	DISPLAY CIRCUIT BOARD
LED607★	87-020-268	LED GL-9PG3 (DIRECTION ◀)
LED608★	87-027-774	LED GL-9HY4 (DIRECTION M/MS)
LED609★	87-020-268	LED GL-9PG3 (DIRECTION ▶)
LED610★	87-020-267	LED UNIT 7P GL-107M12 (LEFT)
LED611★	87-020-267	LED UNIT 7P GL-107M12 (RIGHT)
LED612★	87-020-749	LED LN-513GKM (PRESET STATION)
LED613★	87-020-272	LED LN-543GK AI (FREQUENCY/TIME)
PL601	82-685-622	LAMP (CASSETTE)
PL602	82-685-622	LAMP (CASSETTE)
PL603	82-685-622	LAMP (FRONT) A
PL604	82-685-622	LAMP (FRONT) A
PL605	82-685-622	LAMP (FRONT) B
PL606	82-685-622	LAMP (FRONT) C

Ref. No.
S601
S602
S603
S604
S605
S606
VL601
VL602
VL603
VL604
=== D
PCB-H
LED60
LED60
LED60
LED61
LED61
PL601
PL602
PL603
PL604
PL605
PL606
S601
S602
S603
S604
S605
S606
VL601
VL602
VL603
VL604
=== A
PCB-I
C501
C502
C503
C504
C505
C506
C507
C508
C511
C512
C551
C552
C553
C554
C555
C556
C556
C557
C558
C559
C560
C561
C562
C563
C564
D551
D552

4
3
4
7
0
1
3
4
7
1

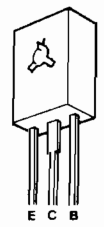

2SA885
2SC1846

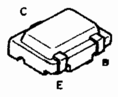

2SA1162
2SA1182
2SC2712
2SC3326

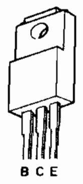

2SB946

	Ref. No.	Part No.	Description
T-X500MKII ONLY)	S601	87-020-269	TACT SW (MEMORY)
0OMKII ONLY)	S602	87-020-269	TACT SW (LO/DX)
X500MKII ONLY)	S603	87-020-270	TACT SW (DSL)
00MKII ONLY)	S604	87-020-269	TACT SW (METAL/NORMAL)
T-X500MKII ONLY)	S605	87-020-269	TACT SW (DOLBY NR)
0OMKII ONLY)	S606	87-020-269	TACT SW (FM MODE)
00MKII ONLY)	VL601	82-685-612	SLIDE VOLUME 10K(B)(TREBLE)
	VL602	82-685-612	SLIDE VOLUME 10K(B)(BASS)
	VL603	82-685-612	SLIDE VOLUME 10K(B)(BALANCE)
	VL604	82-685-613	SLIDE VOLUME 100K (FADER)

=== DISPLAY CIRCUIT BOARD SECTION (CT-X300MKII ONLY) ===

	Ref. No.	Part No.	Description
II ONLY)	PCB-H	84-416-602	DISPLAY CIRCUIT BOARD
	LED607★	87-020-268	LED GL-9PG3 (DIRECTION ◀)
	LED608★	87-027-774	LED GL-9HY4 (DIRECTION M/MS)
	LED609★	87-020-268	LED GL-9PG3 (DIRECTION ▶)
	LED612★	87-020-748	LED LN-513PK (PRESET STATION)
	LED613★	87-027-756	LED LN-543PK (FREQUENCY/TIME)
KII ONLY) ===	PL601	82-685-622	LAMP (CASSETTE)
	PL602	82-685-622	LAMP (CASSETTE)
	PL603	84-415-622	LAMP (FRONT) A
	PL604	84-415-623	LAMP (FRONT) A
	PL605	84-415-617	LAMP (FRONT) B
	PL606	84-415-617	LAMP (FRONT) C
◀)			
M/MS)	S601	87-020-269	TACT SW (MEMORY)
▶)	S602	87-020-269	TACT SW (LO/DX)
(LEFT)	S603	87-020-269	TACT SW (DSL)
	S604	87-020-269	TACT SW (METAL/NORMAL)
(RIGHT)			
STATION)	S605	87-020-269	TACT SW (DOLBY NR)
ENCY/TIME)	S606	87-022-269	TACT SW (FM MODE)
	VL601	82-685-612	SLIDE VOLUME 10K(B)(TREBLE)
	VL602	82-685-612	SLIDE VOLUME 10K(B)(BASS)
	VL603	82-685-612	SLIDE VOLUME 10K(B)(BALANCE)
	VL604	82-685-613	SLIDE VOLUME 100K (FADER)

=== AMP CIRCUIT BOARD SECTION ===

	Ref. No.	Part No.	Description
	PCB-I	84-415-604	AMP CIRCUIT BOARD
	C501	★ 87-015-627	CAP,CHIP 1000P
	C502	★ 87-015-627	CAP,CHIP 1000P
	C503	★ 87-010-234	CAP,ELECT 47-16 5L
	C504	★ 87-010-234	CAP,ELECT 47-16 5L
	C505	★ 87-010-234	CAP,ELECT 47-16 5L
EBLE)	C506	★ 87-010-234	CAP,ELECT 47-16 5L
	C507	★ 87-010-238	CAP,ELECT 1000-16S
SS)			
LANCE)	C508	★ 87-010-238	CAP,ELECT 1000-16S
ER)	C511	★ 87-010-381	CAP,ELECT 330-16SME
	C512	★ 87-010-238	CAP,ELECT 1000-16S
	C551	★ 87-010-238	CAP,ELECT 1000-16S
II ONLY) ===	C552	★ 87-010-488	CAP,ELECT 2200-16
	C553	★ 87-010-244	CAP,ELECT 22-16
	C554	★ 87-010-244	CAP,ELECT 22-16
◀)	C555	★ 87-010-075	CAP,ELECT 10-16
M/MS)			
▶)	C556	★ 87-010-075	CAP,ELECT 10-16 (CT-X500MKII ONLY)
	C556	★ 87-015-679	CAP,ELECT 33-10 (EXCEPT CT-X500MKII)
(LEFT)	C557	★ 84-902-602	CAP,TANTALUM 4.7-16V
(RIGHT)	C558	★ 87-010-238	CAP,ELECT 1000-16S
STATION)			
ENCY/TIME)	C559	★ 87-010-075	CAP,ELECT H5 10U-16V
	C560	★ 87-010-071	CAP,ELECT 1-50
	C561	★ 87-010-075	CAP,ELECT 10-16
	C562	★ 87-010-071	CAP,ELECT 1-50
	C563	★ 87-010-234	CAP,ELECT 47-16 5L
	C564	★ 87-010-234	CAP,ELECT 47-16 5L
	D551	87-027-365	DIODE S5277B
	D552	87-027-365	DIODE S5277B

Ref. No.	Part No.	Description
D553	87-020-027	DIODE,CHIP 1SS184
D554	87-020-125	DIODE 1SS181
D555	87-020-027	DIODE,CHIP 1SS184
D556	87-020-027	DIODE,CHIP 1SS184
D557	87-020-027	DIODE,CHIP 1SS184
D558	87-020-027	DIODE,CHIP 1SS184
D559	87-027-365	DIODE S5277B
D560	87-027-365	DIODE S5277B
D561	87-020-125	DIODE 1SS181
D562	87-027-365	DIODE S5277B
D563	87-027-365	DIODE S5277B
D564	87-020-339	DIODE,CHIP 1SS226
D565	87-027-365	DIODE S5277B
D566	87-020-125	DIODE 1SS181
⚠ R570	★ 87-025-396	RES,MFO S 3W-22(F)
⚠ R573	★ 87-025-396	RES,MFO S 3W-22(F)

=== DOLBY NR CIRCUIT BOARD SECTION ===
(CT-X500MKII ONLY)

Ref. No.	Part No.	Description
	82-685-630	DOLBY B/C UNIT (W/PCB-J)

=== DOLBY NR CIRCUIT BOARD SECTION ===
(EXCEPT CT-X500MKII)

Ref. No.	Part No.	Description
	87-020-751	DOLBY B/C UNIT (W/PCB-K)(CT-X400IIONLY)
	87-020-283	DOLBY B/C UNIT (W/PCB-K)(CT-X300IIONLY)

=== REMOTE CONTROL CIRCUIT BOARD SECTION ===
(CT-X500MKII ONLY)

Ref. No.	Part No.	Description
PCB-L	84-415-607	.REMOTE CONTROL CIRCUIT BOARD
	★ 82-685-605	BUZZER (3 CONNECTOR)
	★ 82-685-606	RECHARGABLE BATTERY PACK
C901	★ 87-015-924	CAP,CHIP TANTALUM 0.33-25
C902	★ 87-015-923	CAP,CHIP TANTALUM 0.22
C903	★ 87-015-768	CAP,CHIP 220P
C904	★ 87-015-768	CAP,CHIP 220P
C905	★ 87-010-297	CAP,CHIP 100PCH
C906	★ 87-010-297	CAP,CHIP 100PCH
C907	★ 87-010-297	CAP,CHIP 100PCH
C908	★ 87-010-297	CAP,CHIP 100PCH
C909	★ 87-010-297	CAP,CHIP 100PCH
C910	★ 87-010-297	CAP,CHIP 100PCH
D901	87-020-027	DIODE CHIP 1SS184
D902	87-020-027	DIODE CHIP 1SS184
LED901★	87-020-746	LED LN-166 (INFRARED-RAY)
S901	82-685-229	RUBBER SW (VOLUME UP)
S902	82-685-229	RUBBER SW (VOLUME DOWN)
S903	82-685-229	RUBBER SW (HOUR DOWN)
S904	82-685-229	RUBBER SW (UP MINUTE)
S905	82-685-229	RUBBER SW (AM/FM)
S906	82-685-229	RUBBER SW (RESET SCAN)
S907	82-685-229	RUBBER SW (FAST FORWARD)
S908	82-685-229	RUBBER SW (REWIND)
S909	82-685-229	RUBBER SW (PLAY/DIRECTION)
S910	82-685-229	RUBBER SW (STOP/EJECT)
S911	82-685-229	RUBBER SW (MANUAL/MS)
S912	82-685-229	RUBBER SW (RADIO/OFF)
X901	★ 87-008-290	CERAMIC RESONATOR 455KHZ

=== SWITCH-1 CIRCUIT BOARD SECTION ===
(CT-X500MKII ONLY)

Ref. No.	Part No.	Description
PCB-M	84-415-606	SWITCH-1 CIRCUIT BOARD
LED701★	87-020-750	LED GL 9NG512 (VOLUME POSITION)
LED702★	87-020-750	LED GL 9NG512 (VOLUME POSITION)
LED703★	87-020-750	LED GL 9NG512 (VOLUME POSITION)
LED704★	87-020-750	LED GL 9NG512 (VOLUME POSITION)
LED705★	87-020-750	LED GL 9NG512 (VOLUME POSITION)
LED706★	87-020-750	LED GL 9NG512 (VOLUME POSITION)
LED707★	87-020-750	LED GL 9NG512 (VOLUME POSITION)
LED708★	87-020-750	LED GL 9NG512 (VOLUME POSITION)
S701	87-031-867	TACT SW (PRESET 1)
S702	87-031-867	TACT SW (PRESET 2)
S703	87-031-867	TACT SW (PRESET 3)
S704	87-031-867	TACT SW (PRESET 4)
S705	87-031-867	TACT SW (PRESET 5)
S706	87-031-867	TACT SW (PRESET 6)
S707	82-685-636	LEAF SW (DOOR)

=== SWITCH-1 CIRCUIT BOARD SECTION ===
(CT-X400MKII ONLY)

Ref. No.	Part No.	Description
PCB-N	84-416-603	SWITCH-1 CIRCUIT BOARD
LED701★	87-020-750	LED GL-9NG512 (VOLUME POSITION)
LED702★	87-020-750	LED GL-9NG512 (VOLUME POSITION)
LED703★	87-020-750	LED GL-9NG512 (VOLUME POSITION)
LED704★	87-020-750	LED GL-9NG512 (VOLUME POSITION)
LED705★	87-020-750	LED GL-9NG512 (VOLUME POSITION)
LED706★	87-020-750	LED GL-9NG512 (VOLUME POSITION)
LED707★	87-020-750	LED GL-9NG512 (VOLUME POSITION)

Ref. No.	Part No.	Description
LED708★	87-020-750	LED GL-9NG512 (VOLUME POSITION)
S701	87-031-814	TACT SW (PRESET 1)
S702	87-031-814	TACT SW (PRESET 2)
S703	87-031-814	TACT SW (PRESET 3)
S704	87-031-814	TACT SW (PRESET 4)
S705	87-031-814	TACT SW (PRESET 5)
S706	87-031-814	TACT SW (PRESET 6)
S707	87-031-814	TACT SW (VOLUME UP)
S708	87-031-814	TACT SW (VULUME DOWN)
S709	87-031-814	TACT SW (PLAY DIRECTION)
S710	87-031-814	TACT SW (FF)
S711	87-031-814	TACT SW (FR)
S712	87-031-814	TACT SW (STOP/EJECT)
S713	87-031-814	TACT SW (MANUAL/MS)
S714	87-031-814	TACT SW (RADIO ON/OFF)
S715	87-031-814	TACT SW (PRESET SCAN)
S716	87-031-814	TACT SW (AM/FM)
S717	87-031-814	TACT SW (TUNING UP)
S718	87-031-814	TACT SW (TUNING DOWN)

=== SWITCH-1 CIRCUIT BOARD SECTION ===
(CT-X300MKII ONLY)

Ref. No.	Part No.	Description
PCB-O	84-414-602	SWITCH-1 CIRCUIT BOARD
S701	87-031-814	TACT SW (TUNING UP)
S702	87-031-814	TACT SW (TUNING DOWN)
S703	87-031-814	TACT SW (AM-FM)
S704	87-031-814	TACT SW (PRESET SCAN)
S705	87-031-814	TACT SW (MANUAL)
S706	87-031-814	TACT SW (RADIO ON/OFF)
S707	87-031-814	TACT SW (PLAY DIRECTION)
S708	87-031-814	TACT SW (◀◀)
S709	87-031-814	TACT SW (▶▶)
S710	87-031-814	TACT SW (STOP/EJECT)
S713	87-031-814	TACT SW (PRESET 1)
S714	87-031-814	TACT SW (PRESET 2)
S715	87-031-814	TACT SW (PRESET 3)
S716	87-031-814	TACT SW (PRESET 4)
S717	87-031-814	TACT SW (PRESET 5)
S718	87-031-814	TACT SW (PRESET 6)
VR701	82-687-605	SLIDE VOLUME 10K(B)(VOLUME)

=== SWITCH-2 CIRCUIT BOARD SECTION ===

Ref. No.	Part No.	Description
PCB-P	82-685-512	SWITCH-2 CIRCUIT BOARD
C801	★ 87-010-244	CAP,ELECT 22-16
C802	★ 87-015-966	CAP,ELECT 2.2-35
C803	★ 87-015-520	CAP,TANTALUM 2.2-16
D801	87-020-262	CHIP DIODE DA204 YK
S801	82-685-505	SLIDE SW (FWD/REV)

=== SUB CIRCUIT BOARD SECTION ===

Ref. No.	Part No.	Description
PCB-Q	82-685-629	SUB CIRCUIT BOARD

=== SEARCH-1 CIRCUIT BOARD SECTION ===

Ref. No.	Part No.	Description
PCB-R	82-685-503	SEARCH-1 CIRCUIT BOARD

=== SEARCH-2 CIRCUIT BOARD SECTION ===

Ref. No.	Part No.	Description
PCB-S	82-685-503	SEARCH-2 CIRCUIT BOARD

=== RELAY CIRCUIT BOARD SECTION ===

Ref. No.	Part No.	Description
PCB-T	82-685-513	RELAY CIRCUIT BOARD

=== MISCELLANEOUS ===

Ref. No.	Part No.	Description
CON12	★ 84-415-614	SOCKET 16P ASSY
⚠ F1	87-035-278	FUSE 500MMA (UL)
⚠ F2	87-035-284	FUSE 2A (UL)
⚠ F3	87-035-287	FUSE 4A (UL)
L1	★ 84-415-618	COIL CHOKE
L2	★ 84-415-618	COIL CHOKE
S1	84-415-628	MICRO SW
BK1	★ 84-415-612	BATTERY (BACK UP)
M801	82-685-465	MOTOR
PH	82-064-254	PB HEAD
S802	82-685-508	MICRO SW (TAPE IN)
S803	82-685-507	MICRO SW (STOP)
S804	82-685-510	MICRO SW (PAUSE)
SOL801	82-685-445	SOLENOID (PAUSE)
SOL802	82-685-444	SOLENOID (EJECT)
SOL803	82-685-406	SOLENOID (FF)
SOL804	82-685-407	SOLENOID (REW)
SOL805	82-685-446	SOLENOID (DIRECTION)
BK1	★ 84-415-612	BATTERY (BACK UP)

SCHEMATIC DIAGRAM-1 (CT-X300II/Z350)

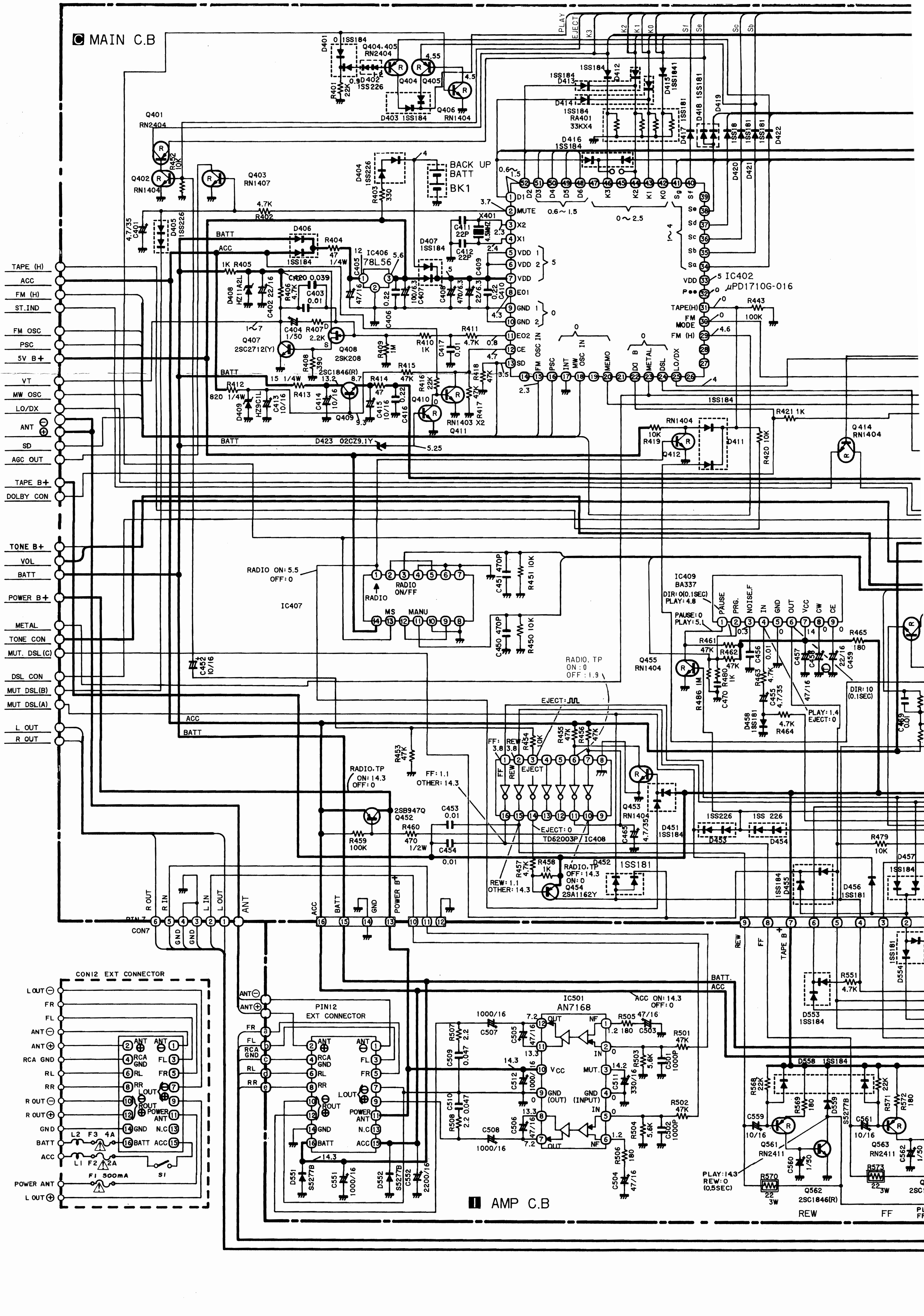
C MAIN C.B
TAPE (H)
ACC
FM (H)
ST.IND
FM OSC
PSC
5V B+
VT
MW OSC
LO/DX
ANT
SD
AGC OUT
TAPE B+
DOLBY CON
TONE B+
VOL
BATT
POWER B+
METAL
TONE CON
MUT. DSL(C)
DSL CON
MUT DSL(B)
MUT DSL(A)
L OUT
R OUT
Q401 RN2404
Q402 RN1404
Q403 RN1407
D401 1SS184
Q404,405 RN2404
D402 1SS226
D403 1SS184
Q406 RN1404
D404 1SS226
BACK UP BATT
BK1
D405 1SS226
C401 4.7/35
D406 1SS184
R404 47 1/4W
IC406 78L56
D407 1SS184
X401 4.5MHz
C411 22P
C412 22P
D408 HZ11A2L
Q407 2SC2712(Y)
Q408 2SK208
Q409 2SC1846(R)
D409 HZ9C1L
Q410
Q411 RN1403 X2
D423 02CZ9.1Y
IC402 μPD1710G-016
D1 D2 D3 D4 D5 D6
MUTE
X2
X1
VDD 1
VDD 2
VDD
EO1
GND 1
GND 2
EO2
CE
SD
FM OSC IN
PSC
INT
MW OSC IN
MEMO
DO B
METAL
DSL
LO/DX
K3 K2 K1 K0 Sg Sf
Se Sd Sc Sb Sa
TAPE(H)
FM MODE
FM (H)
R443 100K
D411
D412 D413 D414 D415 D416 D417 D418 D419 D420 D421 D422
1SS184 1SS181
RA401 33KX4
PLAY
EJECT
Q412
RN1404
R419 10K
R420 10K
R421 1K
Q414 RN1404
RADIO ON: 5.5
OFF: 0
IC407
RADIO ON/FF
MS
MANU
C451 470P
R451 10K
C450 470P
R450 10K
IC409 BA337
DIR: 0(0.1SEC)
PLAY: 4.8
PAUSE: 0
PLAY: 5.1
PAUSE PRG. NOISE.F IN GND OUT VCC CW CE
Q455 RN1404
R465 180
D458 1SS181
R464 4.7K
DIR: 10 (0.1SEC)
PLAY: 1.4
EJECT: 0
RADIO, TP
ON: 0
OFF: 1.9
EJECT:
FF REW EJECT
TD62003P/IC408
Q453 RN1404
D451 1SS184
D453 1SS226
D454 1SS 226
R479 10K
D455 1SS184
D456 1SS181
D457 1SS184
RADIO.TP
ON: 14.3
OFF: 0
FF: 1.1
OTHER: 14.3
Q452 2SB947Q
R459 100K
R460 470 1/2W
C453 0.01
C454 0.01
REW: 1.1
OTHER: 14.3
Q454 2SA1162Y
D452 1SS181
RADIO.TP OFF: 14.3 ON: 0
R OUT R IN GND L IN L OUT ANT
ACC BATT GND POWER B+
CON7
REW FF TAPE B+
CON12 EXT CONNECTOR
L OUT
FR
FL
ANT
RCA GND
RL
RR
R OUT
GND
BATT
ACC
POWER ANT
L2 F3 4A
L1 F2 2A
F1 500mA
S1
PIN12 EXT CONNECTOR
ANT
N.C
D551 S5277B
C551 1000/16
D552 S5277B
C552 2200/16
IC501 AN7168
ACC ON: 14.3
OFF: 0
OUT NF IN VCC MUT. GND (OUT) GND (INPUT)
R501 47K
R502 47K
C501 1000P
C502 1000P
C507 1000/16
C508 1000/16
I AMP C.B
BATT.
ACC
R551 4.7K
D553 1SS184
D554
D558 1SS184
D559 S5277B
Q561 RN2411
Q562 2SC1846(R)
Q563 RN2411
PLAY: 14.3
REW: 0
(0.5SEC)
R570 22 3W
R573 22 3W
REW
FF

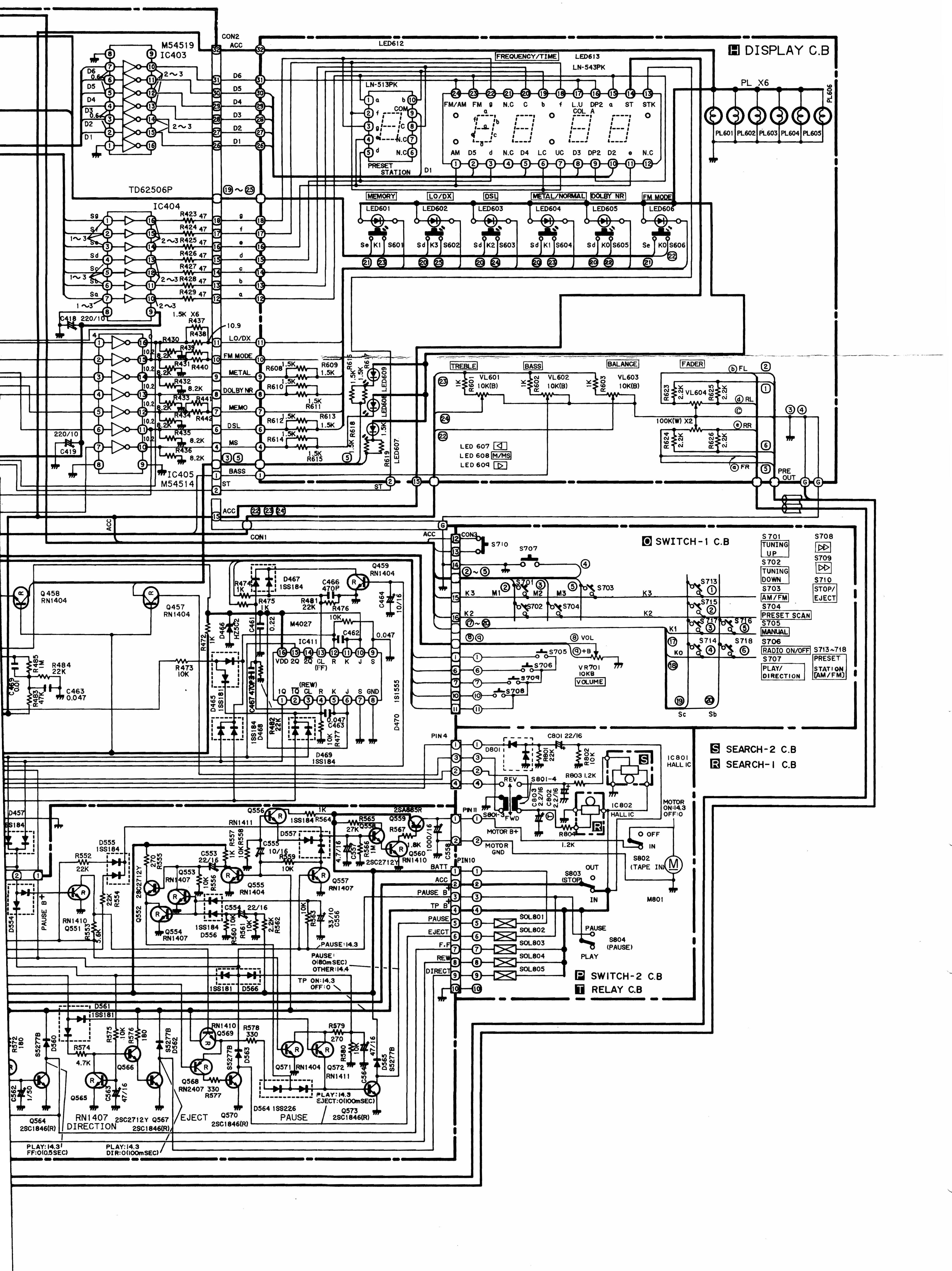

H DISPLAY C.B
M54519
IC403
TD62506P
IC404
IC405
M54514
CON2
CON1
CON3
ACC
LED612
LED613
LN-543PK
LN-513PK
FREQUENCY/TIME
PRESET STATION
D1
PL X6
PL601
PL602
PL603
PL604
PL605
PL606
FM/AM
FM
N.C
ST
STK
AM
D5
D4
LC
UC
D3
DP2
D2
L.U
COL
MEMORY
LO/DX
DSL
METAL/NORMAL
DOLBY NR
FM MODE
LED601
LED602
LED603
LED604
LED605
LED606
S601
S602
S603
S604
S605
S606
LED607
LED608
LED609
LED 607 ◁
LED 608 M/MS
LED 609 ▷
TREBLE
BASS
BALANCE
FADER
VL601 10K(B)
VL602 10K(B)
VL603 10K(B)
VL604
100K(W) X2
PRE OUT
METAL
DOLBY NR
MEMO
MS
BASS
ST
C418 220/10
C419 220/10
1.5K X6
O SWITCH-1 C.B
S701 TUNING UP
S702 TUNING DOWN
S703 AM/FM
S704 PRESET SCAN
S705 MANUAL
S706 RADIO ON/OFF
S707 PLAY/DIRECTION
S708 ▷▷
S709 ▷▷
S710 STOP/EJECT
S713~718 PRESET
STATION [AM/FM]
VR701 10KB VOLUME
K3
K2
K1
K0
Sc
Sb
Q458 RN1404
Q457 RN1404
Q459 RN1404
D467 1SS184
C466 470P
M4027
IC411
D465 1SS181
D468 1SS184
D469 1SS184
D470 1S1555
PIN4
PIN11
D801
C801 22/16
IC801 HALL IC
IC802 HALL IC
S801-4
S801-3
REV
FWD
MOTOR B+
MOTOR GND
MOTOR ON:14.3 OFF:0
S802 (TAPE IN)
S803 (STOP)
S804 (PAUSE)
M801
S SEARCH-2 C.B
R SEARCH-1 C.B
P SWITCH-2 C.B
T RELAY C.B
SOL801
SOL802
SOL803
SOL804
SOL805
BATT
PAUSE B+
TP B+
PAUSE
EJECT
F.F
REW
DIRECT
PLAY
Q556 RN1411
Q559 2SA885R
Q560 RN1410
Q553 RN1407
Q554 RN1407
Q555 RN1404
Q557 RN1407
Q551 RN1410
Q552 2SC2712Y
D555 1SS184
D556 1SS184
D557
D566 1SS181
D561 1SS181
D457 1SS184
PAUSE:14.3
PAUSE: 0(80mSEC) OTHER:14.4
TP ON:14.3 OFF:0
Q569 RN1410
Q568 RN2407
Q570 2SC1846(R)
Q571 RN1404
Q572 RN1411
Q573 2SC1846(R)
Q564 2SC1846(R)
Q565 RN1407
Q566
Q567 2SC1846(R)
D564 1SS226
PLAY:14.3 EJECT:0(100mSEC)
DIRECTION
EJECT
PAUSE
PLAY:14.3 FF:0(0.5SEC)
PLAY:14.3 DIR:0(100mSEC)

SCHEMATIC DIAGRAM–2 (CT-X300II/Z350)

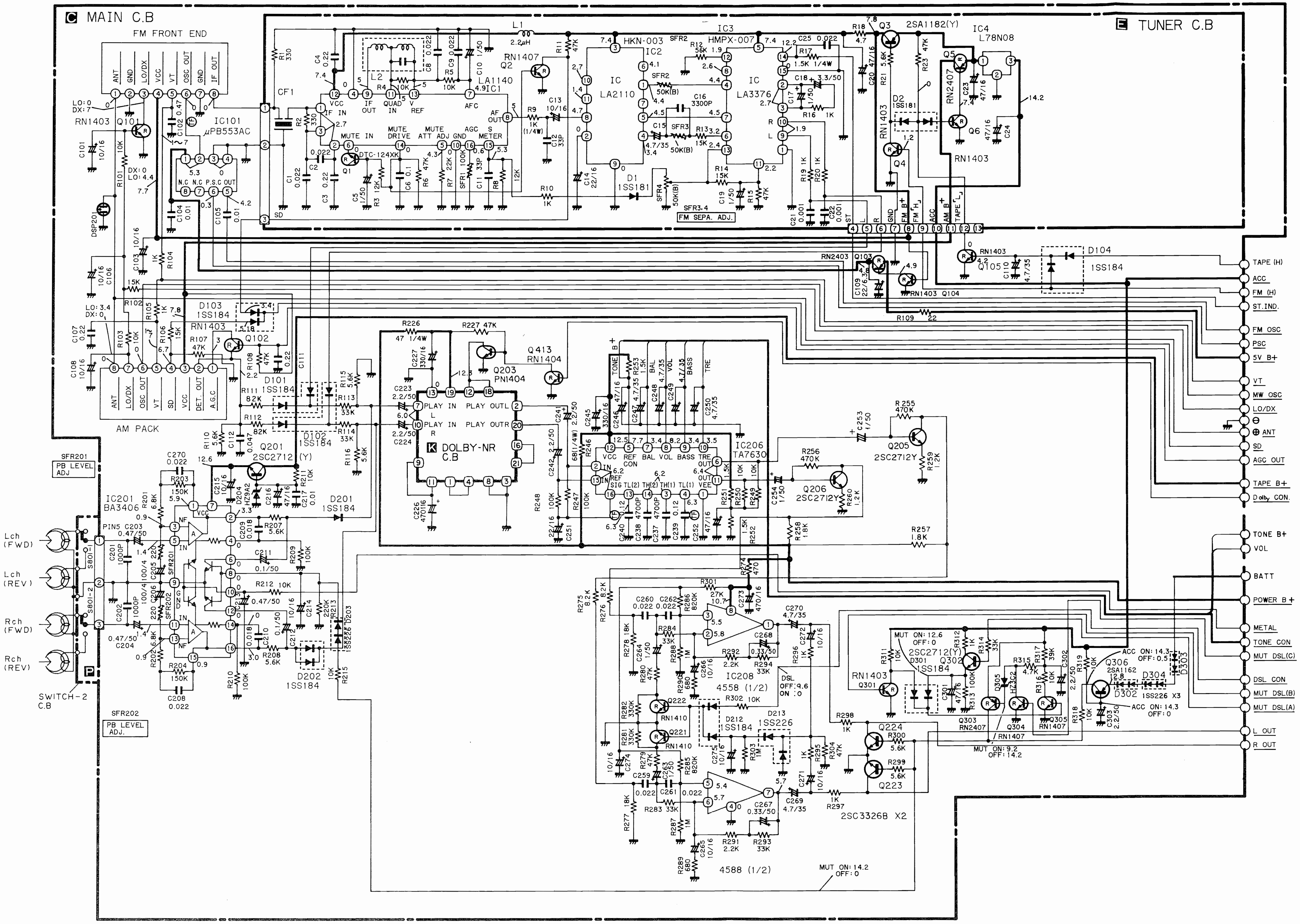
C MAIN C.B
FM FRONT END
ANT
GND
LO/DX
VCC
VT
OSC OUT
GND
IF OUT
LO: 0
DX: 7
RN1403 Q101
IC101
µPB553AC
N.C N.C P.S.C OUT
DSP201
AM PACK
ANT
LO/DX
OSC OUT
VT
SD
VCC
DET. OUT
A.G.C
RN1403 Q102
D103 1SS184
D101 1SS184
D102 1SS184
Q201 2SC2712 (Y)
D201 1SS184
IC201 BA3406
SFR201 PB LEVEL ADJ
SFR202 PB LEVEL ADJ.
D202 1SS184
D203 1SS226
Lch (FWD)
Lch (REV)
Rch (FWD)
Rch (REV)
S801-1
S801-2
P
SWITCH-2 C.B
CF1
L1 2.2µH
LA1140
IC1
RN1407 Q2
DTC-124XK Q1
IF IN
MUTE IN
MUTE DRIVE
MUTE ATT ADJ
AGC GND
S METER
AF OUT
AFC
QUAD
V REF
IC3
HKN-003 SFR2
HMPX-007
IC2
IC LA2110
IC LA3376
SFR3
SFR4
D1 1SS181
SFR3,4
FM SEPA. ADJ.
Q3 2SA1182(Y)
IC4 L78N08
E TUNER C.B
Q5 RN2407
D2 1SS181
RN1403 Q4
Q6 RN1403
L
R
GND
FM B+
FM H
ACC
AM B+
TAPE L
RN2403 Q103
RN1403 Q104
RN1403 Q105
D104 1SS184
R109
K DOLBY-NR C.B
PLAY IN L
PLAY IN R
PLAY OUTL
PLAY OUTR
Q413 RN1404
Q203 PN1404
IC206 TA7630
VCC
REF CON
BAL
VOL
BASS
TRE OUT
SIG IN
REF
TL(2) TH(2) TH(1) TL(1)
VEE
TONE
BASS
TRE
Q205 2SC2712Y
Q206 2SC2712Y
IC208 4558 (1/2)
4588 (1/2)
Q222 RN1410
Q221 RN1410
D212 1SS184
D213 1SS226
DSL OFF: 9.6 ON: 0
Q224
Q223
2SC3326B X2
MUT ON: 14.2 OFF: 0
MUT ON: 12.6 OFF: 0
2SC2712(Y) Q302
D301 1SS184
RN1403 Q301
Q303 RN2407
Q304 RN1407
Q305 RN1407
D305 HZ3C2
Q306 2SA1162
D302 1SS226 X3
D303
D304
ACC ON: 14.3 OFF: 0.5
ACC ON: 14.3 OFF: 0
MUT ON: 9.2 OFF: 14.2
TAPE (H)
ACC
FM (H)
ST.IND.
FM OSC
PSC
5V B+
VT
MW OSC
LO/DX
⊖
⊕ ANT
SD
AGC OUT
TAPE B+
Dolby CON.
TONE B+
VOL
BATT
POWER B+
METAL
TONE CON
MUT DSL(C)
DSL CON
MUT DSL(B)
MUT DSL(A)
L OUT
R OUT

SCHEMATIC DIAGRAM–3 (CT-X400II/Z450)

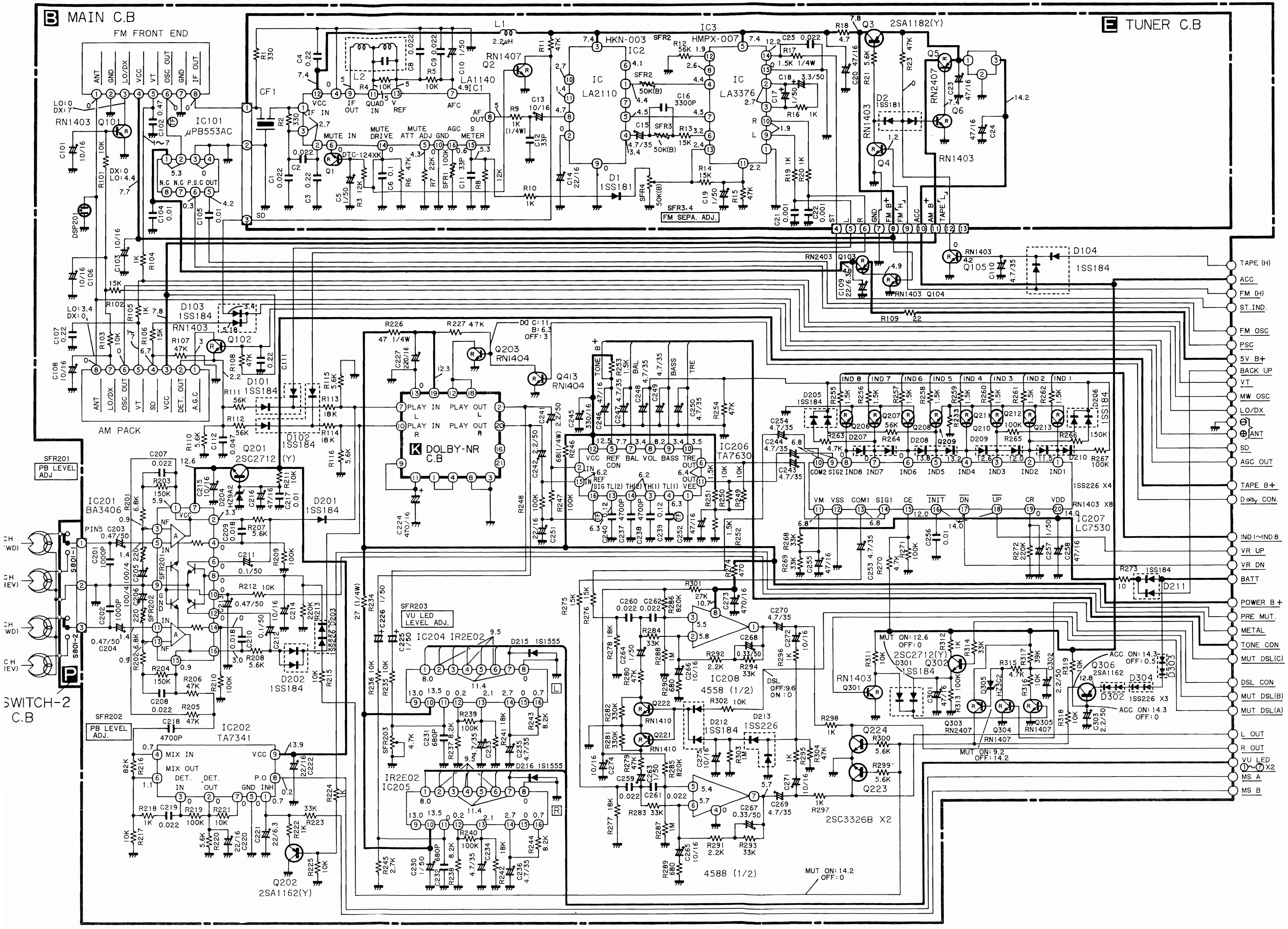
B MAIN C.B
FM FRONT END
E TUNER C.B
AM PACK
K DOLBY-NR C.B
P SWITCH-2 C.B
IC101 μPB553AC
IC1 LA1140
IC2 HKN-003
IC LA2110
IC3 HMPX-007
IC LA3376
IC201 BA3406
IC202 TA7341
IC204 IR2E02
IC205 IR2E02
IC206 TA7630
IC207 LC7530
IC208 4558 (1/2)
4588 (1/2)
Q3 2SA1182(Y)
Q201 2SC2712 (Y)
Q202 2SA1162(Y)
Q203 RN1404
Q413 RN1404
Q306 2SA1162
2SC3326B X2
FM SEPA. ADJ.
SFR201 PB LEVEL ADJ
SFR202 PB LEVEL ADJ.
SFR203 VU LED LEVEL ADJ.
TAPE (H)
ACC
FM (H)
ST.IND.
FM OSC
PSC
5V B+
BACK UP
VT
MW OSC
LO/DX
ANT
SD
AGC OUT
TAPE B+
Dolby CON.
IND 1~IND 8
VR UP
VR DN
BATT
POWER B+
PRE MUT.
METAL
TONE CON
MUT DSL(C)
DSL CON
MUT DSL(B)
MUT DSL(A)
L OUT
R OUT
VU LED ①~⑦ X2
MS A
MS B
MUT ON: 14.2 OFF: 0
MUT ON: 9.2 OFF: 14.2
ACC ON: 14.3 OFF: 0.5
ACC ON: 14.3 OFF: 0

SCHEMATIC DIAGRAM–4 (CT-X400II/Z450)

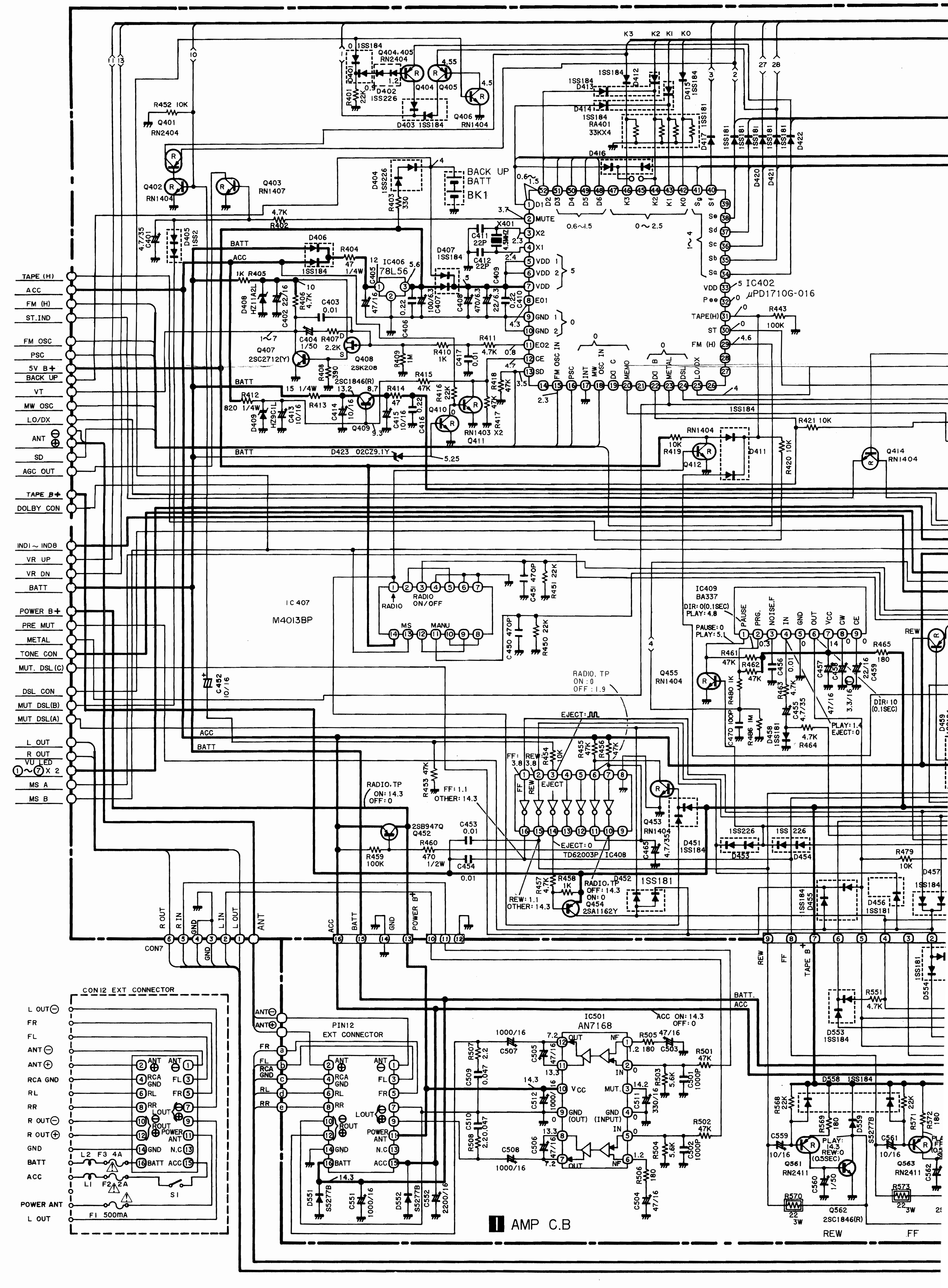
TAPE (H)
ACC
FM (H)
ST.IND
FM OSC
PSC
5V B+
BACK UP
VT
MW OSC
LO/DX
ANT ⊖ ⊕
SD
AGC OUT
TAPE B+
DOLBY CON
INDI ~ IND8
VR UP
VR DN
BATT
POWER B+
PRE MUT
METAL
TONE CON
MUT. DSL(C)
DSL CON
MUT DSL(B)
MUT DSL(A)
L OUT
R OUT
VU LED ①~⑦ X 2
MS A
MS B
IC402 µPD1710G-016
IC406 78L56
IC407 M4013BP
IC408 TD62003P
IC409 BA337
IC501 AN7168
BACK UP BATT BK1
X401 4.5MHz
RADIO ON/OFF
RADIO, TP ON: 0 OFF: 1.9
RADIO.TP ON: 14.3 OFF: 0
FF: 1.1 OTHER: 14.3
REW: 1.1 OTHER: 14.3
EJECT: 0
DIR: 0(0.1SEC) PLAY: 4.8
PAUSE: 0 PLAY: 5.1
DIR: 10 (0.1SEC)
PLAY: 1.4 EJECT: 0
Q452 2SB947Q
Q454 2SA1162Y
Q455 RN1404
Q407 2SC2712(Y)
Q408 2SK208
Q409 2SC1846(R)
Q561 RN2411
Q562 2SC1846(R)
Q563 RN2411
D423 02CZ9.1Y
CON7
R OUT
R IN
GND
L IN
L OUT
ANT
ACC
BATT
POWER B+
REW
FF
TAPE B+
CON12 EXT CONNECTOR
L OUT⊖
FR
FL
ANT⊖
ANT⊕
RCA GND
RL
RR
R OUT⊖
R OUT⊕
GND
BATT
ACC
POWER ANT
L OUT
L2 F3 4A
L1 F2 2A
S1
F1 500mA
PIN12 EXT CONNECTOR
ACC ON: 14.3 OFF: 0
AMP C.B
REW
FF

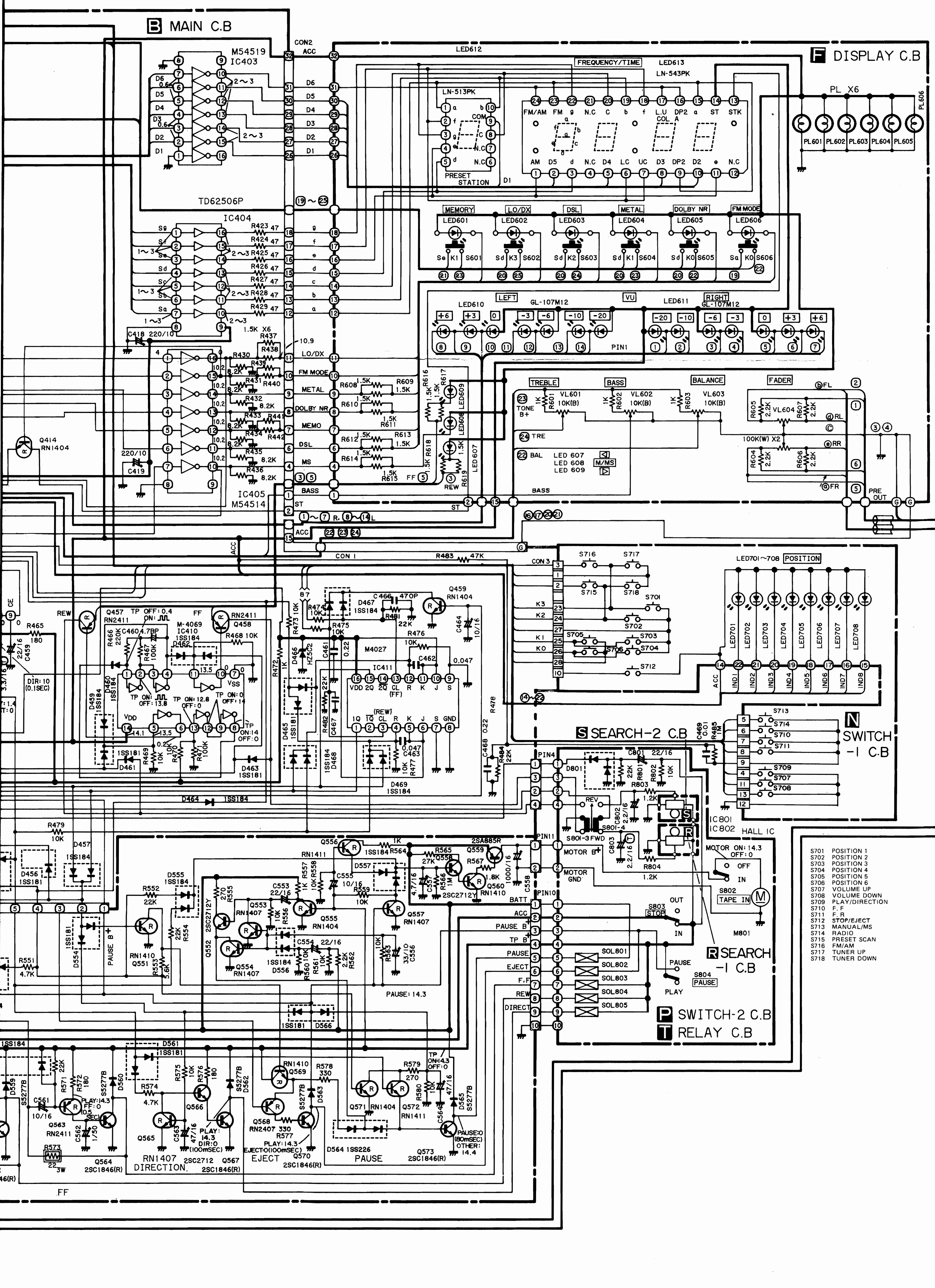
B MAIN C.B
F DISPLAY C.B
M54519 IC403
TD62506P
IC404
IC405 M54514
M-4069 IC410
M4027 IC411
LN-513PK
LN-543PK
FREQUENCY/TIME
LED612
LED613
PRESET STATION
PL X6
PL601 PL602 PL603 PL604 PL605 PL606
MEMORY LO/DX DSL METAL DOLBY NR FM MODE
LED601 LED602 LED603 LED604 LED605 LED606
S601 S602 S603 S604 S605 S606
LEFT VU RIGHT
LED610 GL-107M12
LED611 GL-107M12
TREBLE BASS BALANCE FADER
VL601 10K(B) VL602 10K(B) VL603 10K(B) VL604
100K(W) X2
LED 607 LED 608 LED 609
PRE OUT
CON1 CON2 CON3
LED701~708 POSITION
S SEARCH-2 C.B
N SWITCH -1 C.B
IC801 IC802 HALL IC
MOTOR ON: 14.3 OFF: 0
S802 TAPE IN
M801
S803 STOP
R SEARCH -1 C.B
S804 PAUSE
SOL801 SOL802 SOL803 SOL804 SOL805
P SWITCH-2 C.B
T RELAY C.B
DIRECTION
EJECT
PAUSE
PAUSE: 14.3
FF

S701	POSITION 1
S702	POSITION 2
S703	POSITION 3
S704	POSITION 4
S705	POSITION 5
S706	POSITION 6
S707	VOLUME UP
S708	VOLUME DOWN
S709	PLAY/DIRECTION
S710	F. F
S711	F. R
S712	STOP/EJECT
S713	MANUAL/MS
S714	RADIO
S715	PRESET SCAN
S716	FM/AM
S717	TUNER UP
S718	TUNER DOWN

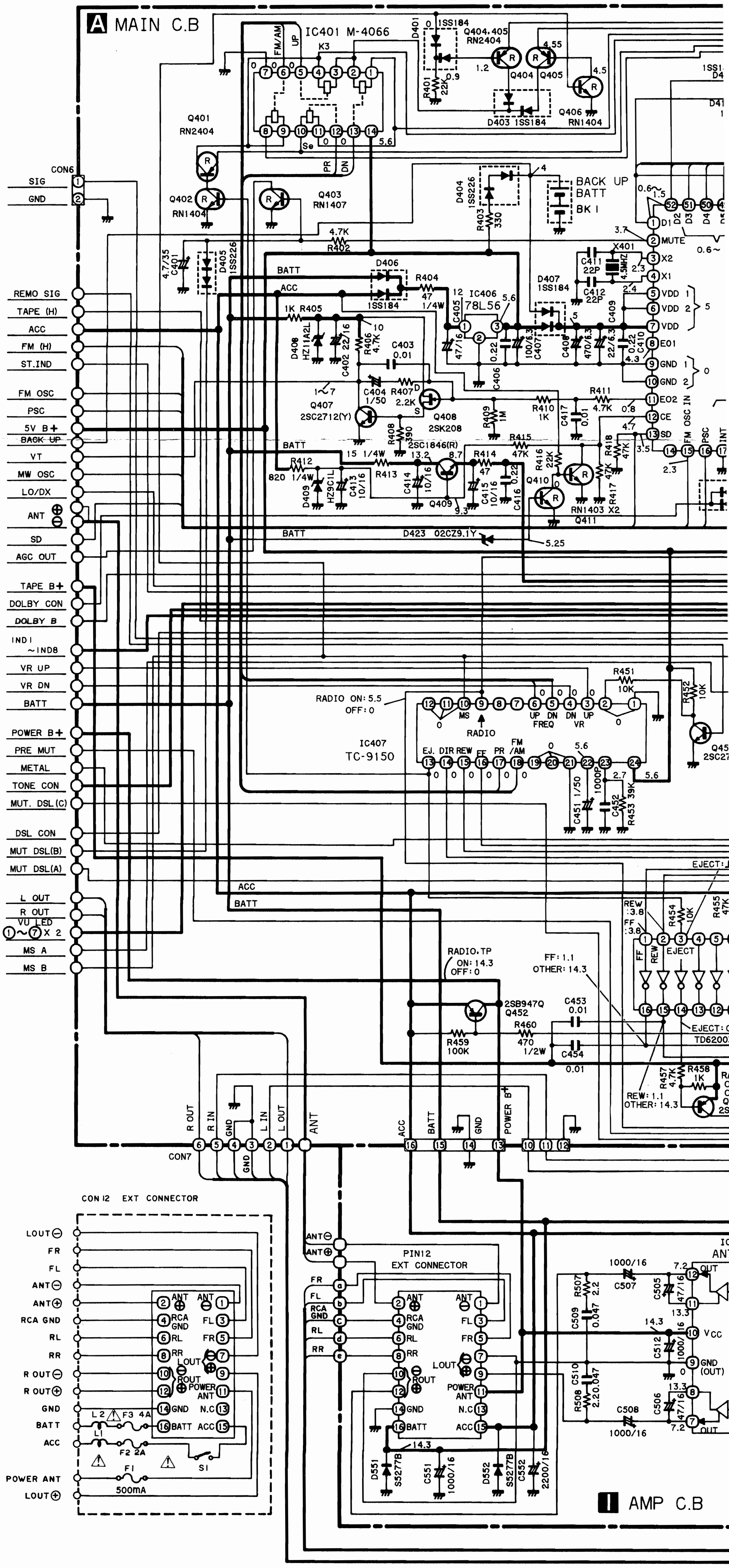

A MAIN C.B
IC401 M-4066
K3
FM/AM
UP
PR
DN
Se
Q401 RN2404
Q402 RN1404
Q403 RN1407
D401 1SS184
Q404,405 RN2404
Q404
Q405
Q406 RN1404
D403 1SS184
R401 22K
D404 1SS226
R403 330
BACK UP BATT BK1
CON6
SIG
GND
4.7K R402
C401 4.7/35
D405 1SS226
D406 1SS184
BATT
ACC
R404 47 1/4W
IC406 78L56
1K R405
D408 HZ11A2L
C402 22/16
R406 4.7K
C403 0.01
C404 1/50
R407 2.2K
Q407 2SC2712(Y)
Q408 2SK208
R409 1M
R408 390
2SC1846(R)
15 1/4W
R413
R412 820 1/4W
D409 HZ9C1L
C413 10/16
C414 10/16
Q409
R414 47
C415 10/16
C416 0.22
R415 47K
R416 22K
Q410
RN1403 X2
Q411
R417 47K
R418 47K
D423 02CZ9.1Y
C405 47/16
C406 0.22
C407 100/6.3
D407 1SS184
C408 470/6.3
C409 22/6.3
C410 0.22
C411 22P
C412 22P
X401 4.5MHZ
R410 1K
R411 4.7K
C417 0.01
MUTE
X2
X1
VDD
EO1
GND
EO2
CE
SD
FM OSC IN
PSC
REMO SIG
TAPE (H)
ACC
FM (H)
ST.IND
FM OSC
PSC
5V B+
BACK UP
VT
MW OSC
LO/DX
ANT ⊕ ⊖
SD
AGC OUT
TAPE B+
DOLBY CON
DOLBY B
IND1 ~IND8
VR UP
VR DN
BATT
POWER B+
PRE MUT
METAL
TONE CON
MUT. DSL(C)
DSL CON
MUT DSL(B)
MUT DSL(A)
L OUT
R OUT
VU LED ①~⑦ X 2
MS A
MS B
RADIO ON: 5.5 OFF: 0
IC407 TC-9150
MS
RADIO
UP DN FREQ
DN UP VR
EJ. DIR REW FF PR FM/AM
R451 10K
R452 10K
Q45
2SC27
C451 1/50
C452 1000P
R453 39K
EJECT
REW :3.8
FF :3.8
R454 10K
R455 47K
TD6200
RADIO.TP ON: 14.3 OFF: 0
FF: 1.1 OTHER: 14.3
2SB947Q Q452
C453 0.01
R460 470 1/2W
C454 0.01
R459 100K
R457 4.7K
R458 1K
REW: 1.1 OTHER: 14.3
R OUT
R IN
GND
L IN
L OUT
ANT
ACC
BATT
GND
POWER B+
CON7
CON12 EXT CONNECTOR
LOUT⊖
FR
FL
ANT⊖
ANT⊕
RCA GND
RL
RR
R OUT⊖
R OUT⊕
GND
BATT
ACC
POWER ANT
LOUT⊕
L2
F3 4A
L1
F2 2A
F1 500mA
S1
ANT⊖
ANT⊕
PIN12 EXT CONNECTOR
FR
FL
RCA GND
RL
RR
POWER ANT
N.C
GND
BATT
ACC
D551 S5277B
C551 1000/16
D552 S5277B
C552 2200/16
1000/16 C507
R507 2.2
C509 0.047
C505 47/16
C512 1000/16
C510 0.047
R508 2.2
C506 47/16
C508 1000/16
VCC
GND (OUT)
OUT
ANT
I AMP C.B

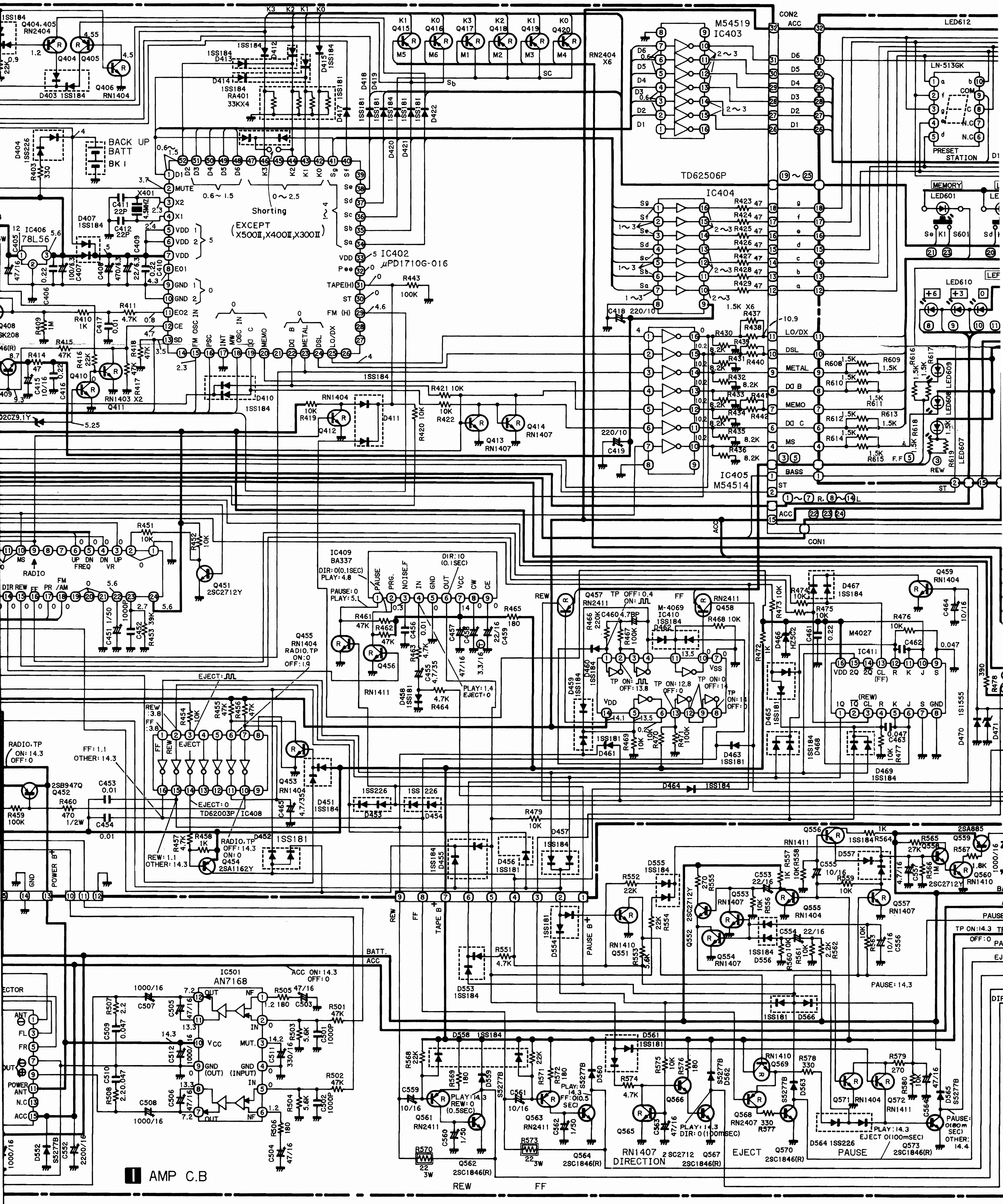

AMP C.B
IC402 μPD1710G-016
IC403 M54519
IC404 TD62506P
IC405 M54514
IC406 78L56
IC408 TD62003P
IC409 BA337
IC410 M-4069
IC411 M4027
IC501 AN7168
LN-513GK
PRESET STATION
LED601
LED606
LED607
LED608
LED609
LED610
LED612
MEMORY
BACK UP BATT BK1
X401 4.5MHZ
Shorting
EXCEPT (X500II, X400II, X300II)
CON1
CON2
ACC
BATT.
POWER B+
TAPE B+
PAUSE B+
REW
FF
DIRECTION
EJECT
PAUSE
LO/DX
DSL
METAL
DX B
MEMO
DX C
MS
BASS
ST
RADIO
MUTE
VDD
GND
EO1
EO2
CE
SD
FM OSC IN
PSC
INT
MW OSC IN
DIR: 0(0.1SEC)
PLAY: 4.8
PAUSE: 0
PLAY: 5.1
RADIO.TP ON: 14.3 OFF: 0
FF: 1.1 OTHER: 14.3
REW: 1.1 OTHER: 14.3
EJECT: 0
TP OFF: 0.4
TP ON: 13.8
PAUSE: 14.3
PLAY: 14.3 EJECT 0(100mSEC)
ANT
FL
FR
OUT
N.C
Q404, 405 RN2404
Q406 RN1404
Q408
Q410
Q411 RN1403 X2
Q412
Q413 RN1407
Q414 RN1407
Q415
Q416
Q417
Q418
Q419
Q420
Q451 2SC2712Y
Q452 2SB947Q
Q453 RN1404
Q454 2SA1162Y
Q455 RN1404
Q456 RN1411
Q457 RN2411
Q458 RN2411
Q459 RN1404
Q551 RN1410
Q552 2SC2712Y
Q553 RN1407
Q554 RN1407
Q555 RN1404
Q556 RN1411
Q557 RN1407
Q558
Q559 2SA885
Q560 RN1410
Q561 RN2411
Q562 2SC1846(R)
Q563 RN2411
Q564 2SC1846(R)
Q565 RN1407
Q566
Q567 2SC1846(R)
Q568 RN2407
Q569 RN1410
Q570 2SC1846(R)
Q571 RN1404
Q572 RN1411
Q573 2SC1846(R)

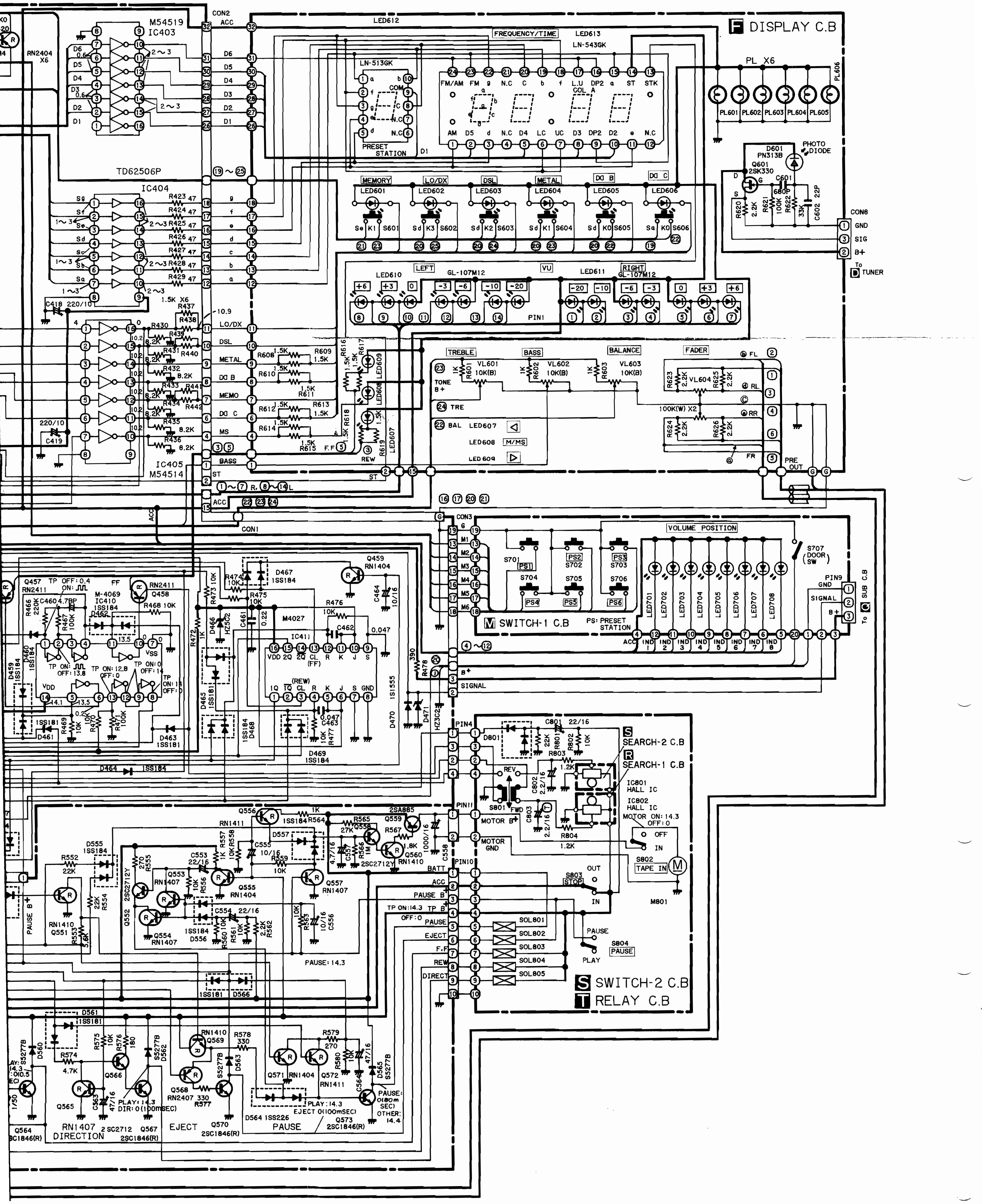
F DISPLAY C.B
M SWITCH-1 C.B
S SEARCH-2 C.B
R SEARCH-1 C.B
S SWITCH-2 C.B
T RELAY C.B
To D TUNER
To Q SUB C.B
M54519 IC403
TD62506P
IC404
IC405 M54514
LN-513GK
LN-543GK
PRESET STATION
FREQUENCY/TIME
MEMORY
LO/DX
DSL
METAL
LEFT
RIGHT
VU
GL-107M12
TREBLE
BASS
BALANCE
FADER
PRE OUT
VOLUME POSITION
PS: PRESET STATION
M4027
M-4069 IC410
PHOTO DIODE
IC801 HALL IC
IC802 HALL IC
MOTOR ON: 14.3 OFF: 0
TAPE IN
M801
SOL801
SOL802
SOL803
SOL804
SOL805
DIRECTION
EJECT
PAUSE

SCHEMATIC DIAGRAM–6 (CT-X500II/Z550)

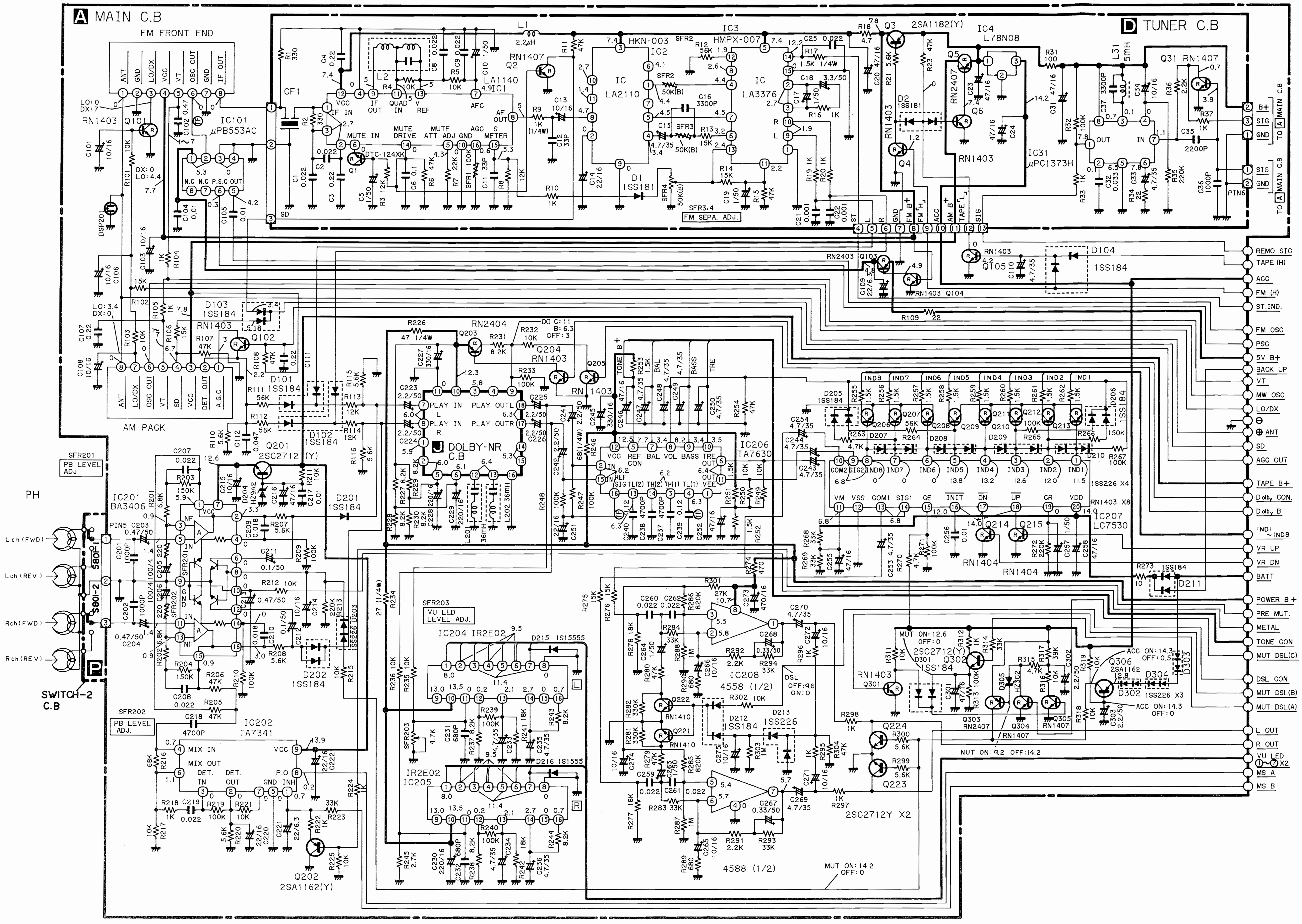
A MAIN C.B
FM FRONT END
D TUNER C.B
J DOLBY-NR C.B
P SWITCH-2 C.B
AM PACK
PH
Lch (FWD)
Lch (REV)
Rch (FWD)
Rch (REV)
IC101 μPB553AC
IC1 LA1140
IC2 HKN-003
IC LA2110
IC3 HMPX-007
IC LA3376
IC4 L78N08
IC31 μPC1373H
Q1 DTC-124XK
Q2 RN1407
Q3 2SA1182(Y)
Q101 RN1403
Q102 RN1403
D103 1SS184
D101 1SS184
D102 1SS184
D104 1SS184
Q103 RN2403
Q104 RN1403
Q105 RN1403
FM SEPA. ADJ.
IC201 BA3406
IC202 TA7341
Q201 2SC2712 (Y)
Q202 2SA1162(Y)
D201 1SS184
D202 1SS184
SFR201 PB LEVEL ADJ
SFR202 PB LEVEL ADJ.
SFR203 VU LED LEVEL ADJ.
IC204 IR2E02
IC205 IR2E02
D215 1S1555
D216 1S1555
RN2404
Q203
Q204 RN1403
Q205 RN1403
IC206 TA7630
IC207 LC7530
IC208 4558 (1/2)
4588 (1/2)
Q206 Q207 Q208 Q209 Q210 Q211 Q212 Q213
D205 1SS184
D206 1SS184
1SS226 X4
RN1403 X8
Q214 Q215 RN1404
D211 1SS184
D212 1SS184
D213 1SS226
Q221 RN1410
Q222 RN1410
Q223 Q224 2SC2712Y X2
Q301 RN1403
Q302 2SC2712(Y)
D301 1SS184
Q303 RN2407
Q304 RN1407
Q305 RN1407
Q306 2SA1162
D302 D303 D304 1SS226 X3
MUT ON: 12.6 OFF: 0
MUT ON: 14.2 OFF: 0
NUT ON: 4.2 OFF: 14.2
ACC ON: 14.3 OFF: 0.5
ACC ON: 14.3 OFF: 0
DSL OFF: 9.6 ON: 0
PLAY IN L
PLAY IN R
PLAY OUTL
PLAY OUTR
VCC REF BAL VOL BASS TRE
TONE BAL BASS TRE
B+
SIG
GND
TO A MAIN C.B
REMO SIG
TAPE (H)
ACC
FM (H)
ST.IND.
FM OSC
PSC
5V B+
BACK UP
VT
MW OSC
LO/DX
⊖
⊕ ANT
SD
AGC OUT
TAPE B+
Dolby CON.
Dolby B
IND1 ~IND8
VR UP
VR DN
BATT
POWER B+
PRE MUT.
METAL
TONE CON
MUT DSL(C)
DSL CON
MUT DSL(B)
MUT DSL(A)
L OUT
R OUT
VU LED ①~⑦X2
MS A
MS B

SCHEMATIC DIAGRAM—7, WIRING—1 (CT-X500II/Z550)

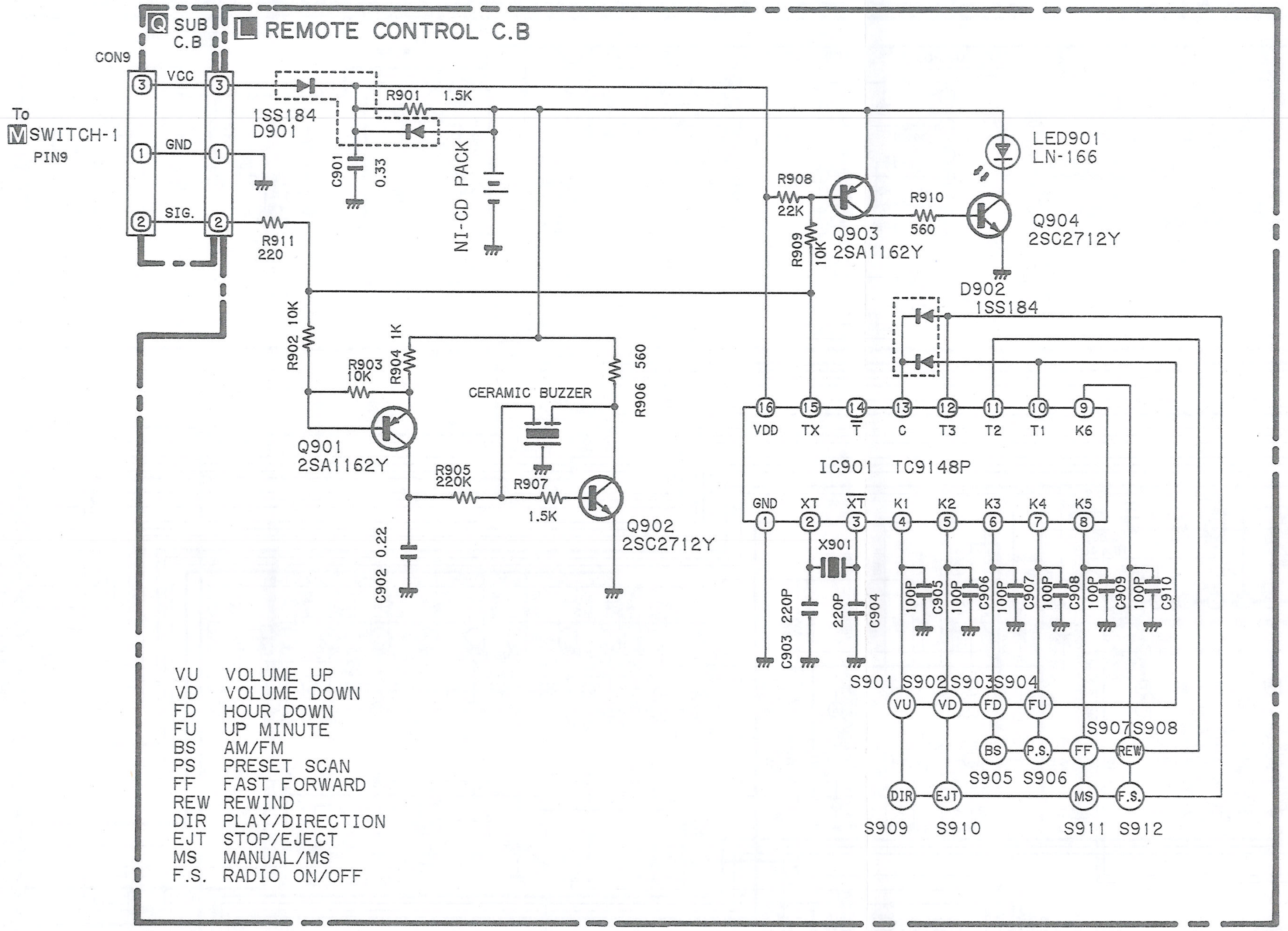
Q SUB C.B
L REMOTE CONTROL C.B
CON9
VCC
GND
SIG.
To M SWITCH-1 PIN9
1SS184 D901
R901 1.5K
C901 0.33
NI-CD PACK
R911 220
R908 22K
R909 10K
Q903 2SA1162Y
R910 560
Q904 2SC2712Y
LED901 LN-166
D902 1SS184
R902 10K
R903 10K
R904 1K
Q901 2SA1162Y
CERAMIC BUZZER
R906 560
R905 220K
R907 1.5K
Q902 2SC2712Y
C902 0.22
IC901 TC9148P
VDD TX T C T3 T2 T1 K6
GND XT XT K1 K2 K3 K4 K5
X901
C903 220P
C904 220P
C905 100P
C906 100P
C907 100P
C908 100P
C909 100P
C910 100P
S901 S902 S903 S904
VU VD FD FU
S907 S908
BS P.S. FF REW
S905 S906
DIR EJT MS F.S.
S909 S910 S911 S912
VU VOLUME UP
VD VOLUME DOWN
FD HOUR DOWN
FU UP MINUTE
BS AM/FM
PS PRESET SCAN
FF FAST FORWARD
REW REWIND
DIR PLAY/DIRECTION
EJT STOP/EJECT
MS MANUAL/MS
F.S. RADIO ON/OFF

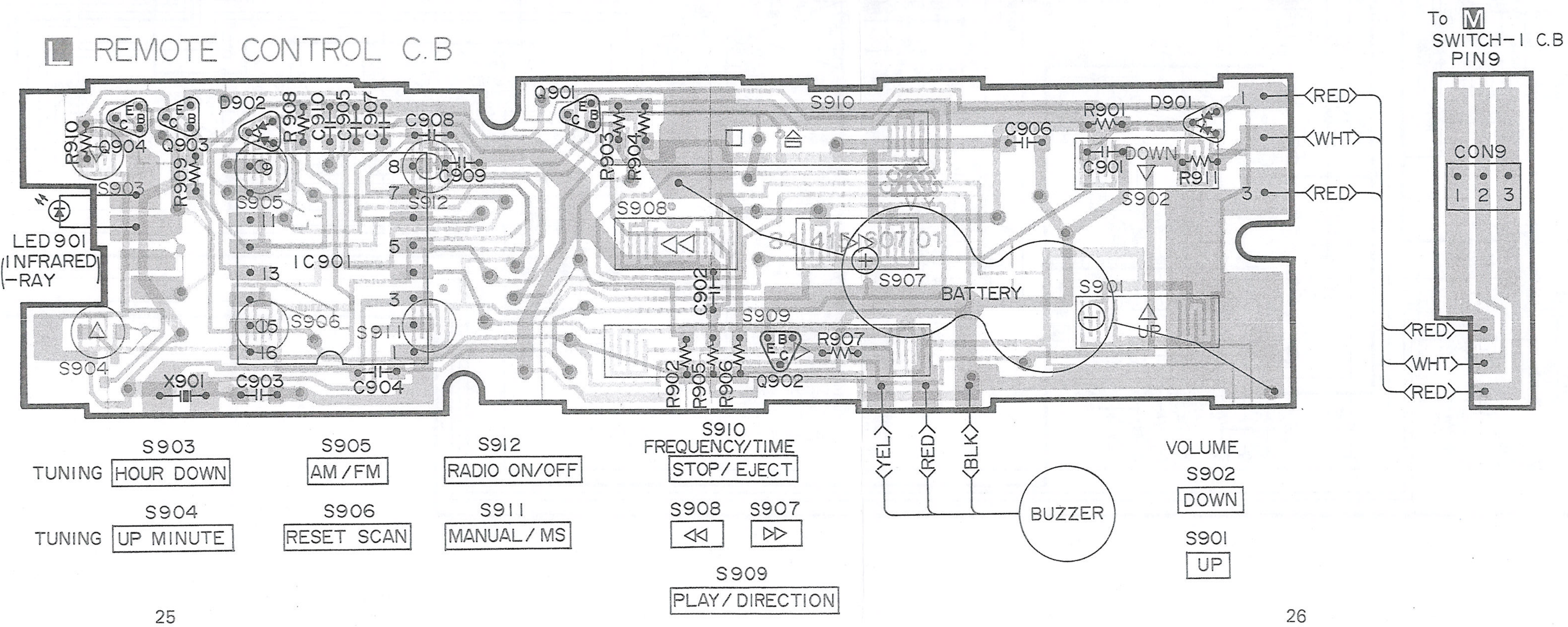
Q SUB C.B
L REMOTE CONTROL C.B
To M SWITCH-1 C.B PIN9
CON9
1 2 3
RED
WHT
RED
LED901 (INFRARED -RAY)
Q904 Q903 D902 R910 R909 R908 C910 C905 C907 C908 C909
S903 S905 S912 S906 S911 S904
IC901
X901 C903 C904
Q901 R903 R904 S910 S908 S907 C902 S909 R902 R905 R906 Q902 R907
BATTERY
C906 R901 D901 C901 DOWN R911 S902 S901 UP
YEL RED BLK
BUZZER
S903 TUNING HOUR DOWN
S904 TUNING UP MINUTE
S905 AM/FM
S906 RESET SCAN
S912 RADIO ON/OFF
S911 MANUAL/MS
S910 FREQUENCY/TIME STOP/EJECT
S908 ⊲⊲
S907 ⊳⊳
S909 PLAY/DIRECTION
VOLUME
S902 DOWN
S901 UP

WIRING-2 (CT-X300II/Z350)

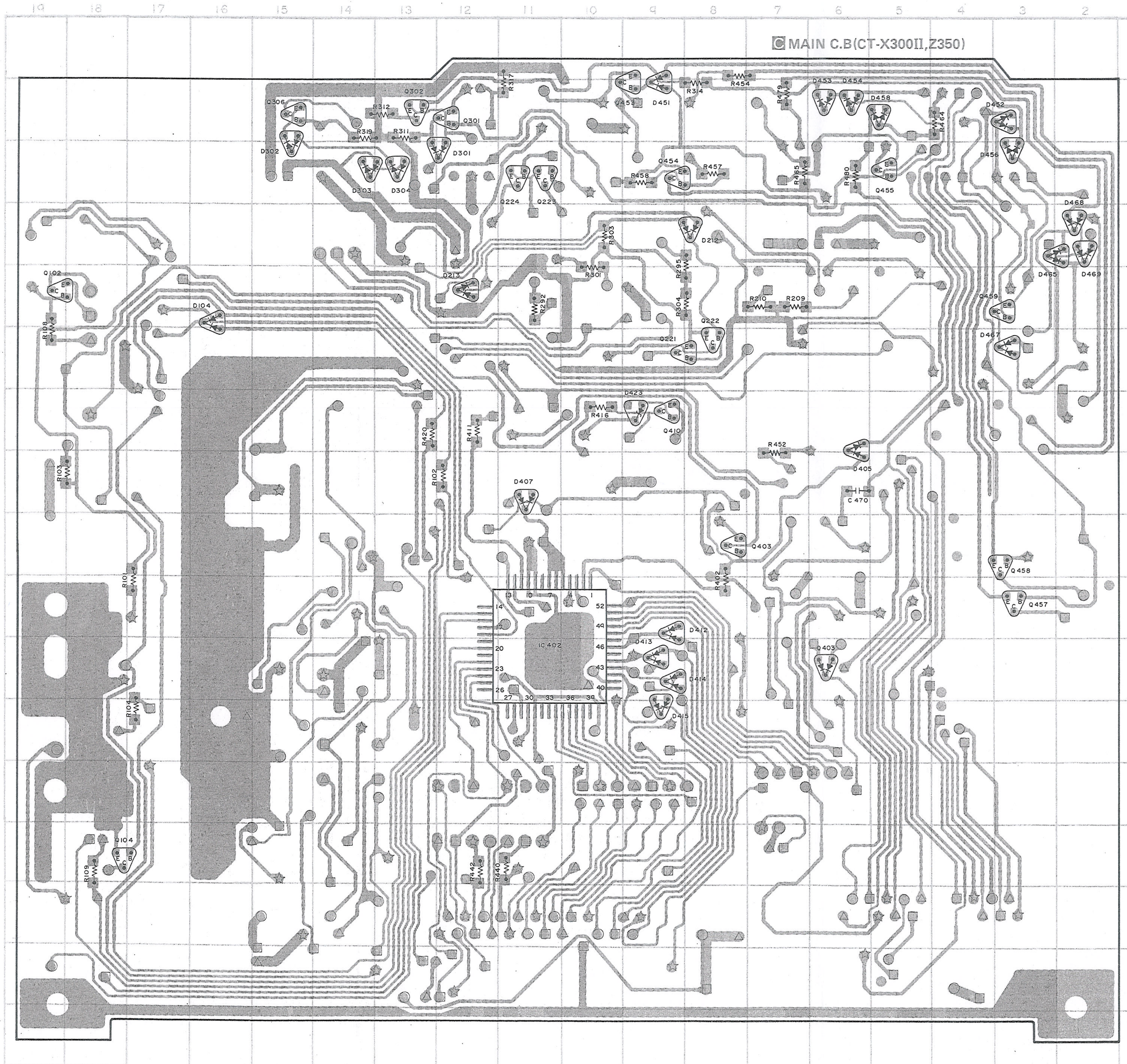
C MAIN C.B(CT-X300II,Z350)
IC402
D104
Q102
Q104
D301
D302
D303
D304
Q301
Q302
Q306
D213
Q224
Q223
D212
Q221
Q222
D451
D453
D454
D458
D452
D456
D468
D465
D469
Q459
D467
Q454
Q455
Q410
D423
D405
C470
D407
Q403
Q458
Q457
D412
D413
D414
D415

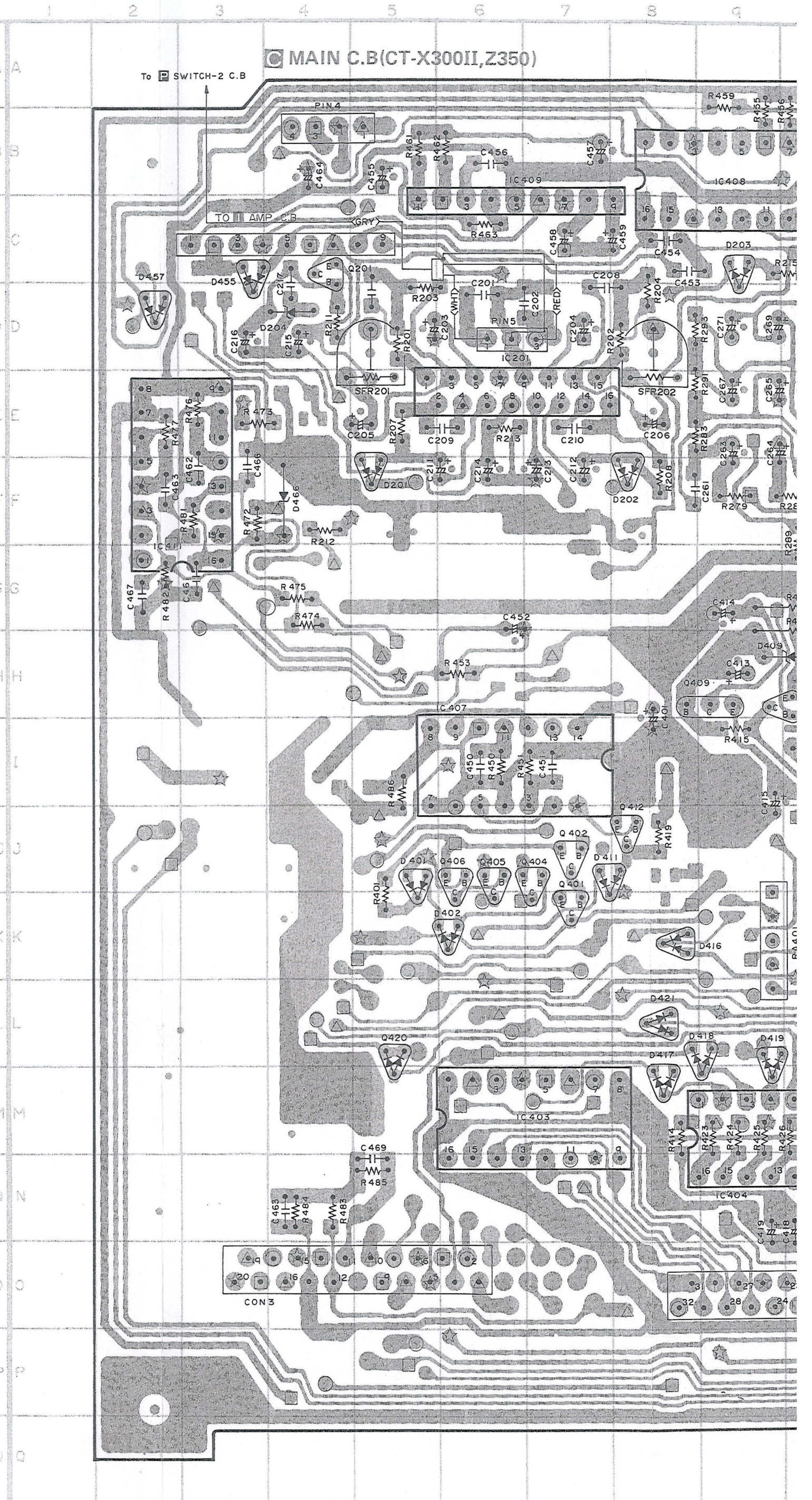
C MAIN C.B(CT-X300II,Z350)
To E SWITCH-2 C.B
PIN4
TO AMP C.B
IC409
IC408
IC201
SFR201
SFR202
PIN5
D455
D457
Q201
D201
D202
D203
D204
D466
IC403
IC404
IC407
Q401
Q402
Q404
Q405
Q406
Q409
Q411
Q412
Q420
D401
D402
D409
D416
D417
D418
D419
D421
CON3

C MAIN C.B(CT-X300II,Z350)

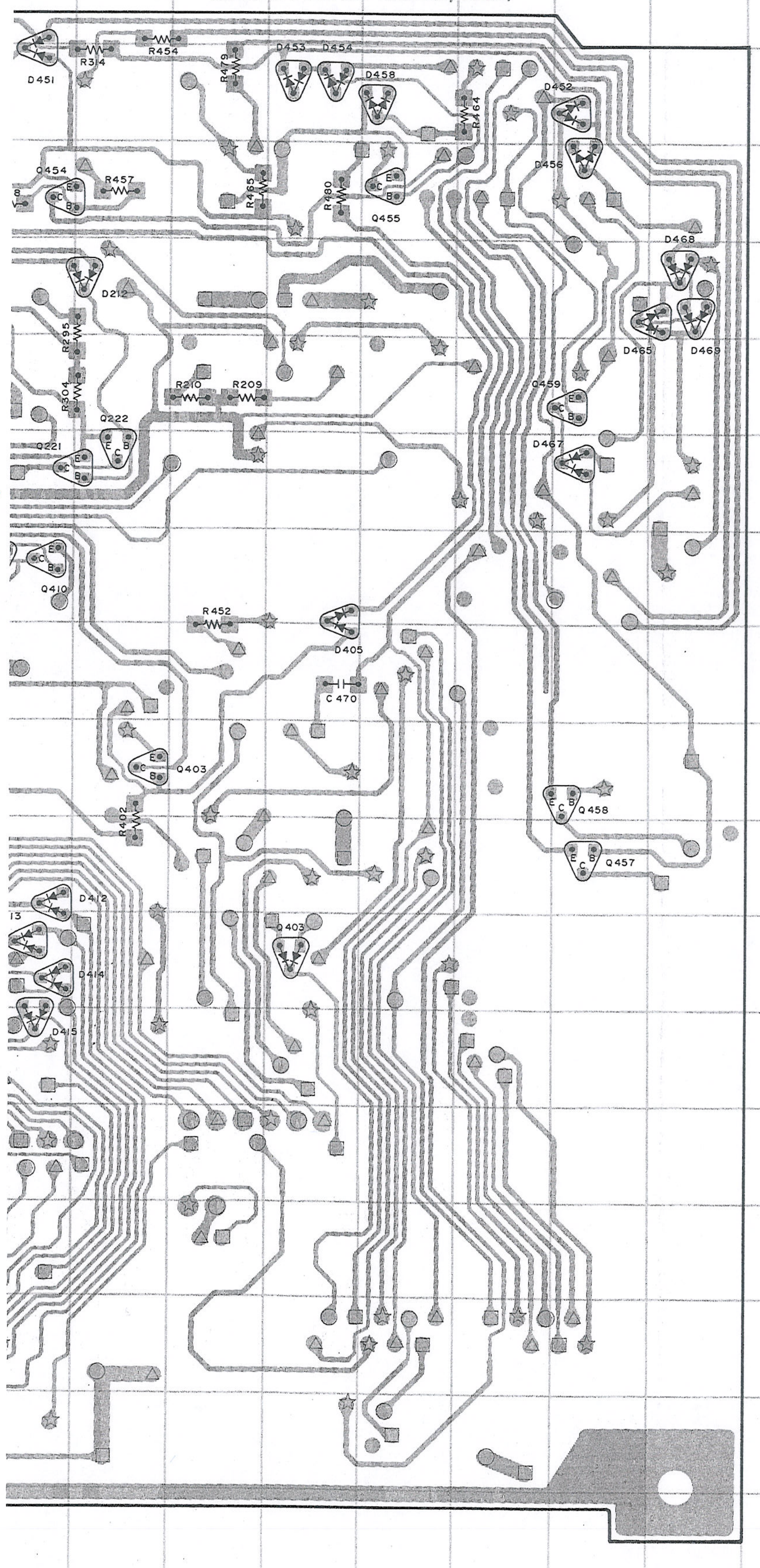

D451
R314
R454
D453
D454
D458
D452
R479
R464
R465
R460
Q455
Q454
R457
D456
D468
D465
D469
D212
R210
R209
Q222
Q221
Q459
D467
Q410
R452
D405
C470
Q403
R402
Q458
Q457
D412
D414
D415
Q403

C MAIN C.B(CT-X300II,Z350)

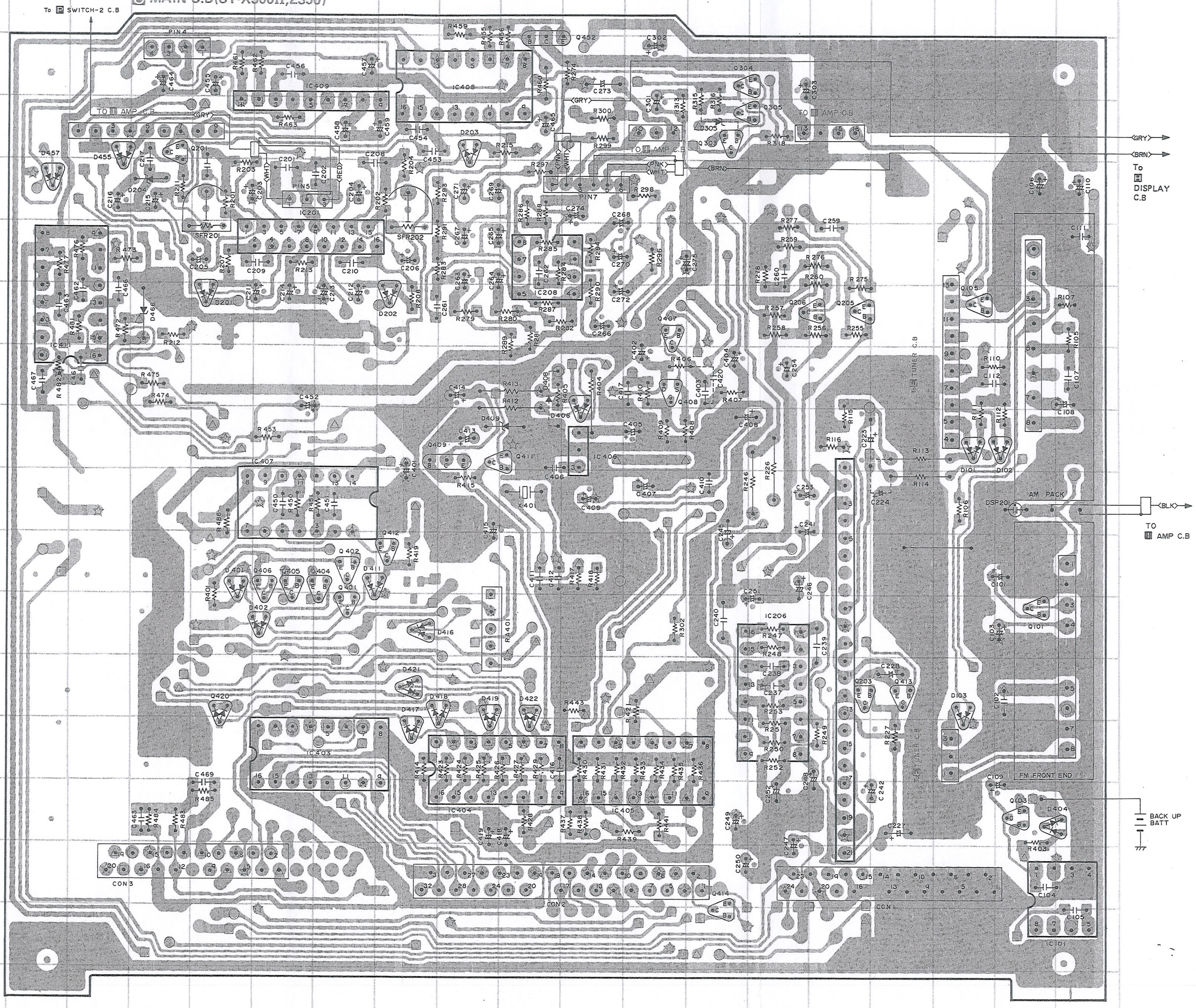

To P SWITCH-2 C.B
PIN4
R459
Q452
C302
IC409
IC408
TO I AMP C.B
GRY
Q304
C303
Q305
TO I AMP C.B
D457
D455
Q201
R203
C201
PIN5
WHT
RED
C208
D203
R215
PNK
WHT
BRN
PIN7
D204
IC201
SFR201
SFR202
R298
C274
C268
R277
C259
R259
R276
R260
R275
Q206
Q205
C205
C209
R213
C210
C206
IC208
R285
R287
R280
R282
C266
C272
R257
R258
R256
R255
D201
D202
R212
R279
Q407
R406
Q408
R407
IC4
R475
R474
C452
R413
R412
D408
R405
D406
R404
C414
D409
C413
Q409
Q411
IC406
C405
C406
R409
R408
R115
R116
C223
R113
R114
D101
D102
R111
R112
C108
C107
R110
C112
R107
R105
Q105
C111
C110
C109
R453
C407
R415
X401
C409
C407
C410
R246
R226
C253
C224
R106
AM PACK
DSP201
C450
C451
R486
Q412
R419
C415
C241
Q402
D401
D406
D405
Q404
Q405
D411
R401
Q401
D402
C411
C412
R417
R418
C240
C251
IC206
R247
C239
R248
C246
D416
R401
R302
C238
C237
D421
Q420
D417
D418
D419
D422
R443
Q203
C228
Q413
D103
IC403
R253
R251
R250
R252
R249
R227
C242
TUNER C.B
C469
R485
IC404
IC405
R414
R428
R430
R437
R438
R439
R441
C249
C252
C247
C227
C102
C103
Q101
C101
FM FRONT END
Q103
D404
R403
C463
R484
R483
CON3
CON2
CON1
C250
Q414
C104
C105
IC101
TO H DISPLAY C.B
BLK
TO I AMP C.B
BACK UP BATT

WIRING-3 (CT-X400II/Z450)

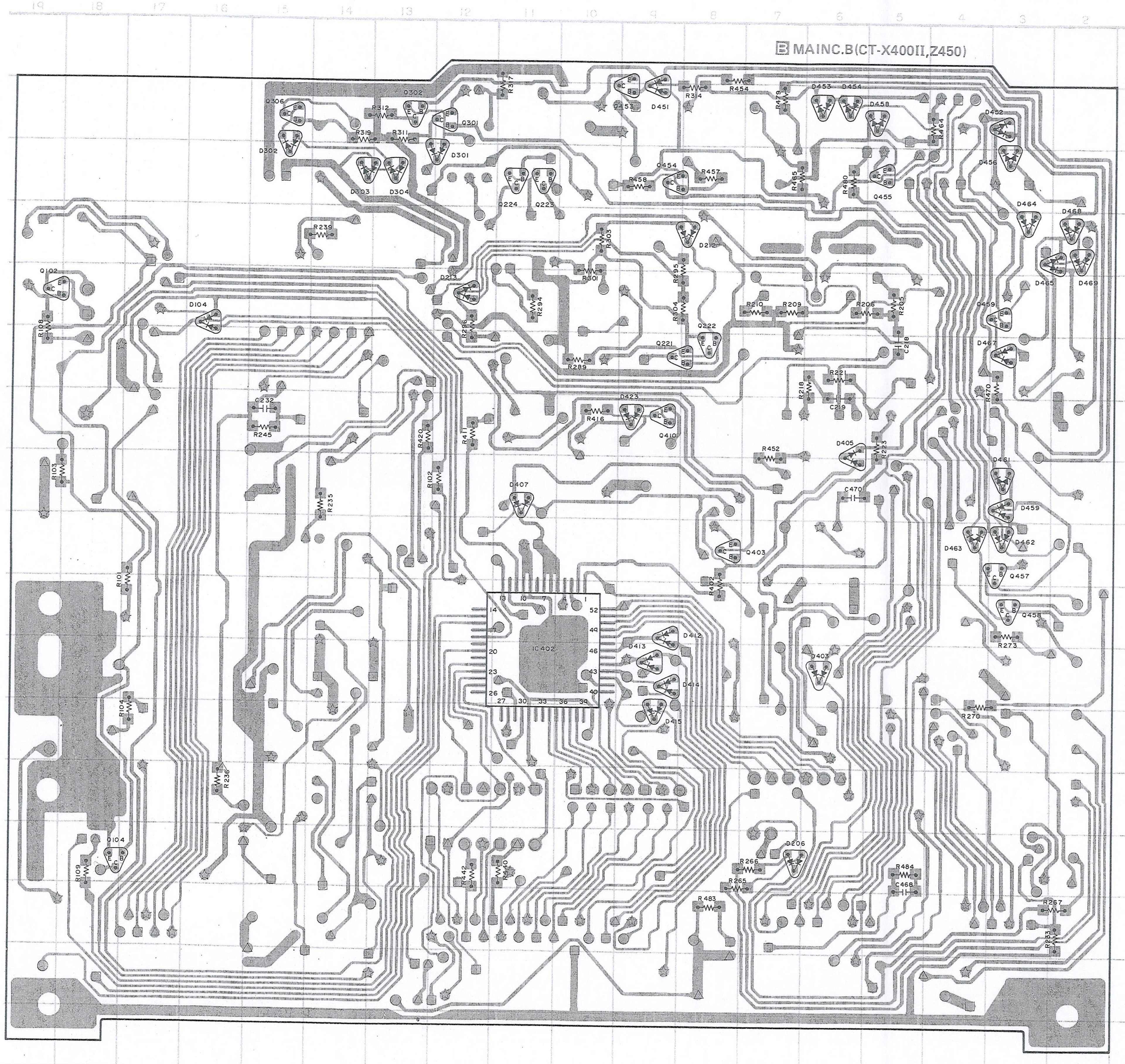
B MAIN C.B(CT-X400II,Z450)
IC402
D301
D302
D303
D304
D306
Q102
Q104
D104
Q221
Q222
Q223
Q224
D212
D213
D405
D407
Q403
Q410
D412
D413
D414
D415
D451
D452
D453
D454
D456
D458
D459
D461
D462
D463
D464
D465
D467
D468
D469
Q457
Q458
D206
C232
C470
C468
R245
R270
R273

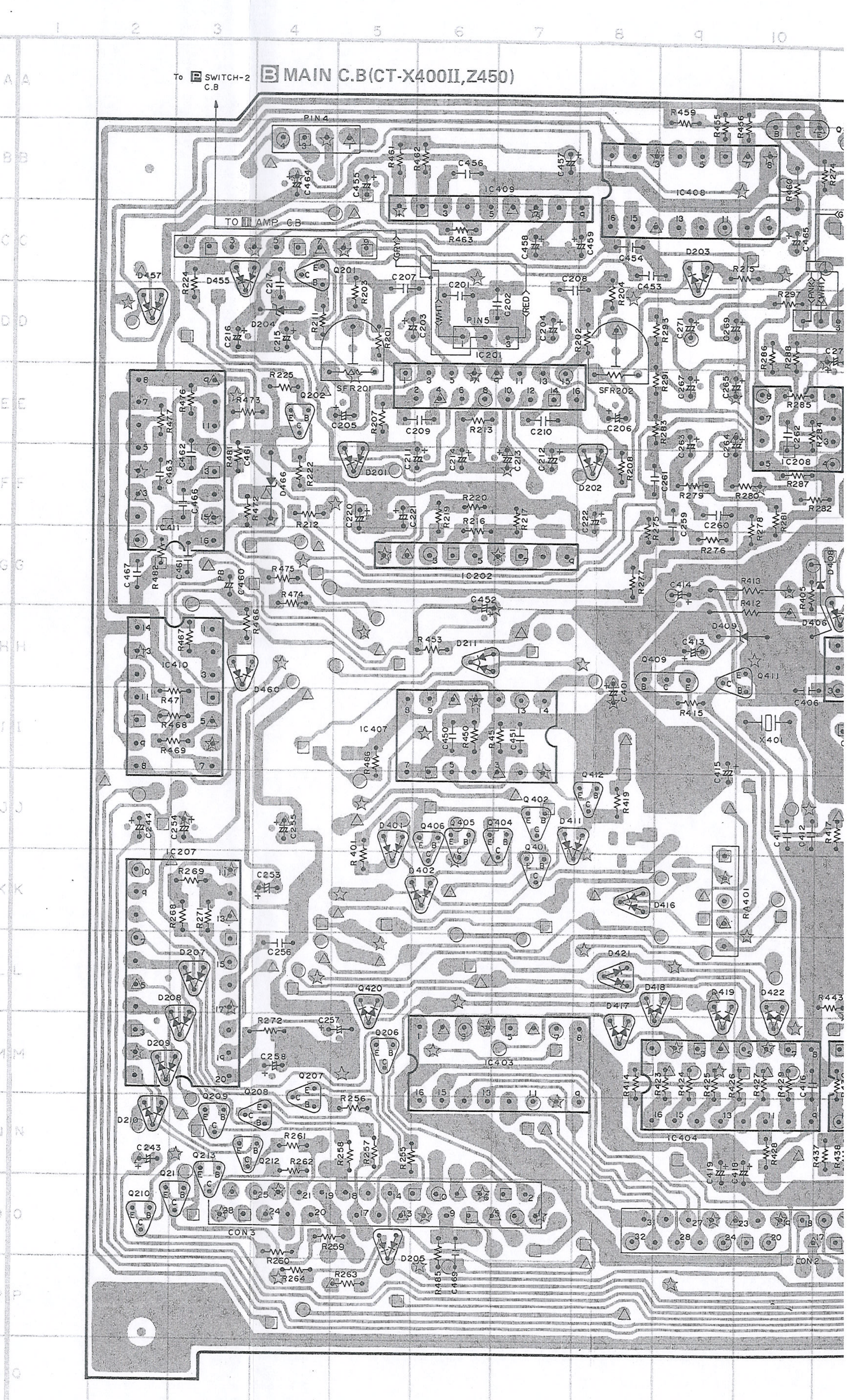
To B SWITCH-2 C.B
B MAIN C.B(CT-X400II,Z450)
PIN4
PIN5
TO B AMP C.B
IC201
IC202
IC207
IC208
IC403
IC404
IC407
IC408
IC409
IC410
IC411
SFR201
SFR202
X401
CON2
CON3
Q201
Q202
Q206
Q207
Q208
Q209
Q210
Q211
Q212
Q213
Q401
Q402
Q409
Q411
Q412
Q420
D201
D202
D203
D204
D205
D207
D208
D209
D210
D211
D401
D402
D404
D405
D406
D408
D409
D411
D416
D417
D418
D419
D421
D422
D455
D457
D460
D466

B MAINC.B(CT-X400II,Z450)

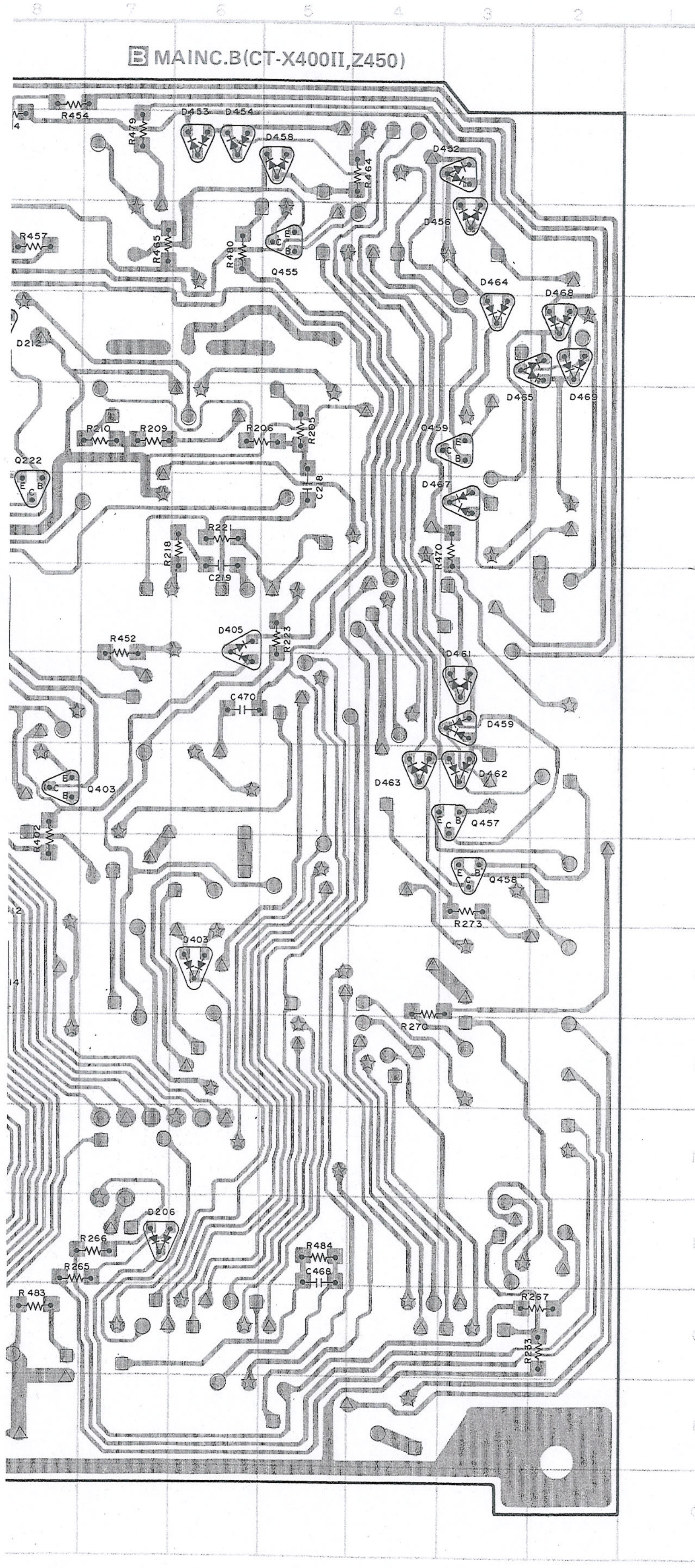

B MAIN C.B(CT-X400II,Z450)

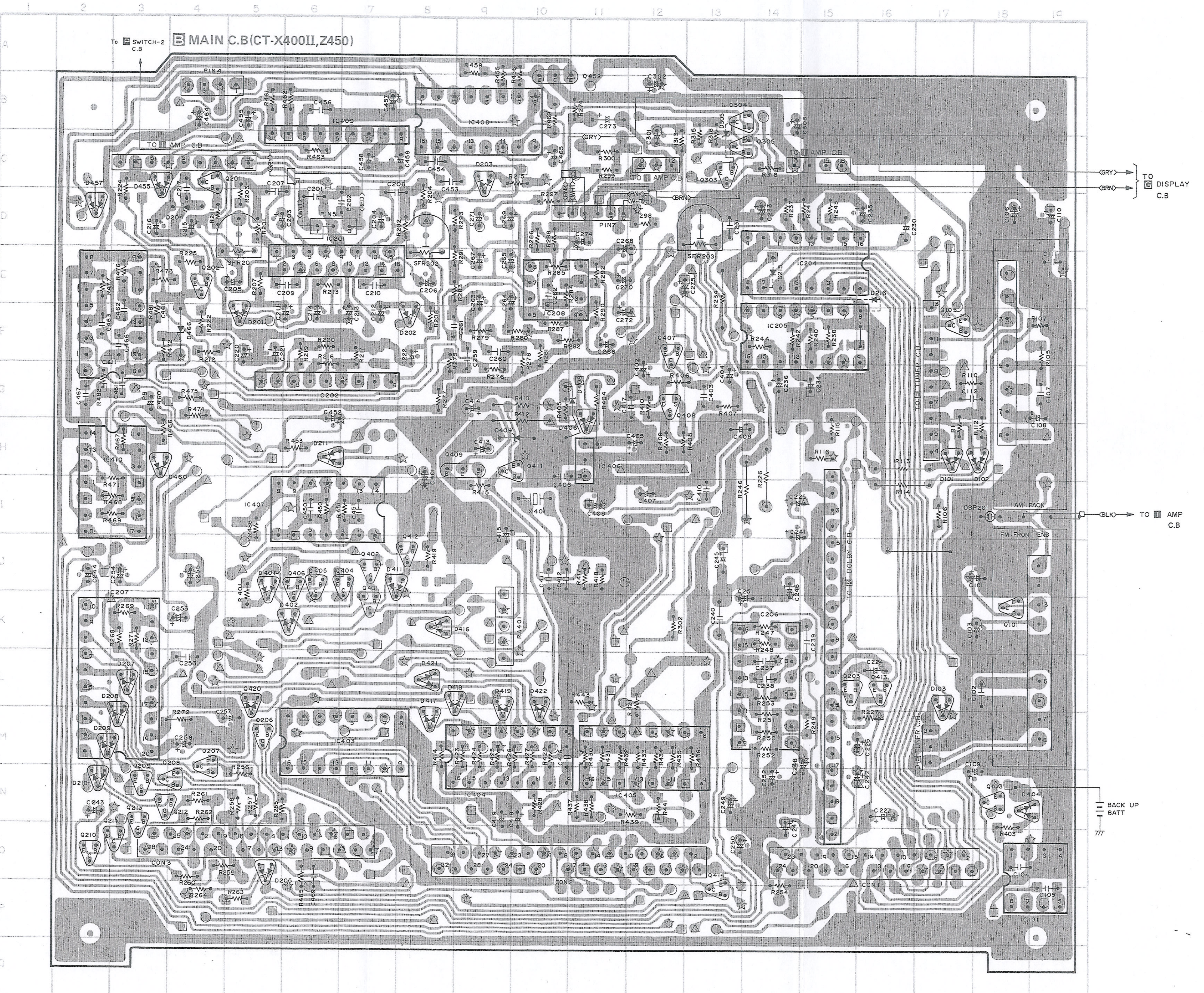
To B SWITCH-2 C.B
TO II AMP C.B
TO G DISPLAY C.B
(GRY)
(BRN)
(BLK)
TO II AMP C.B
AM PACK
FM FRONT END
TO TUNER C.B
TO DOLBY C.B
BACK UP BATT
CON1
CON2
CON3

WIRING–4 (CT-X500II/Z550)

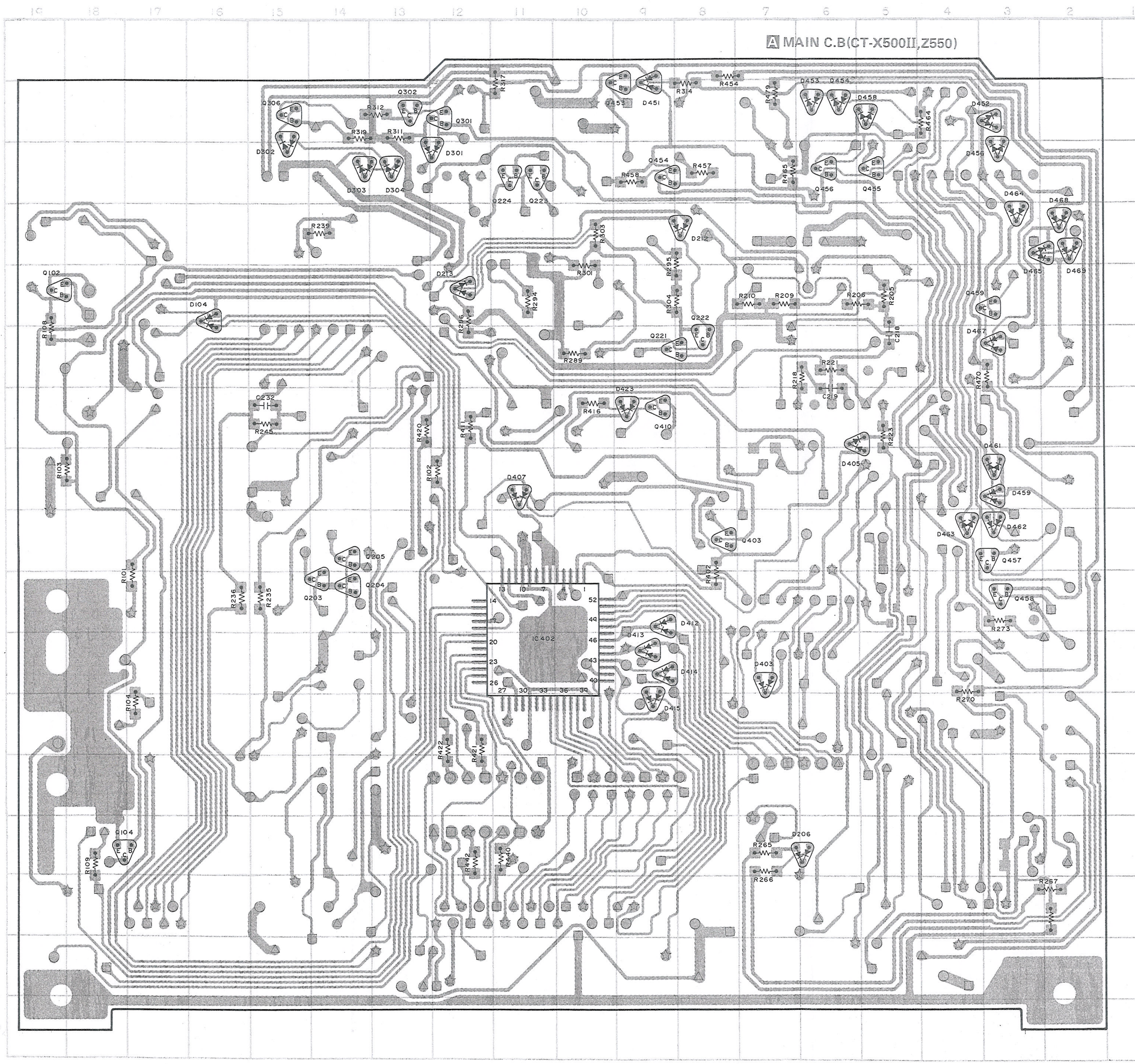
A MAIN C.B(CT-X500II,Z550)
IC402
Q102
Q104
Q203
Q204
Q205
Q221
Q222
Q223
Q224
Q301
Q302
Q306
Q403
Q410
Q451
Q454
Q455
Q456
Q457
D104
D206
D212
D213
D301
D302
D303
D304
D403
D405
D407
D412
D413
D414
D415
D423
D451
D452
D453
D454
D456
D458
D459
D461
D462
D463
D464
D465
D467
D468
D469
A
B
C
D
E
F
G
H
I
J
K
L
M
N
O
P
Q

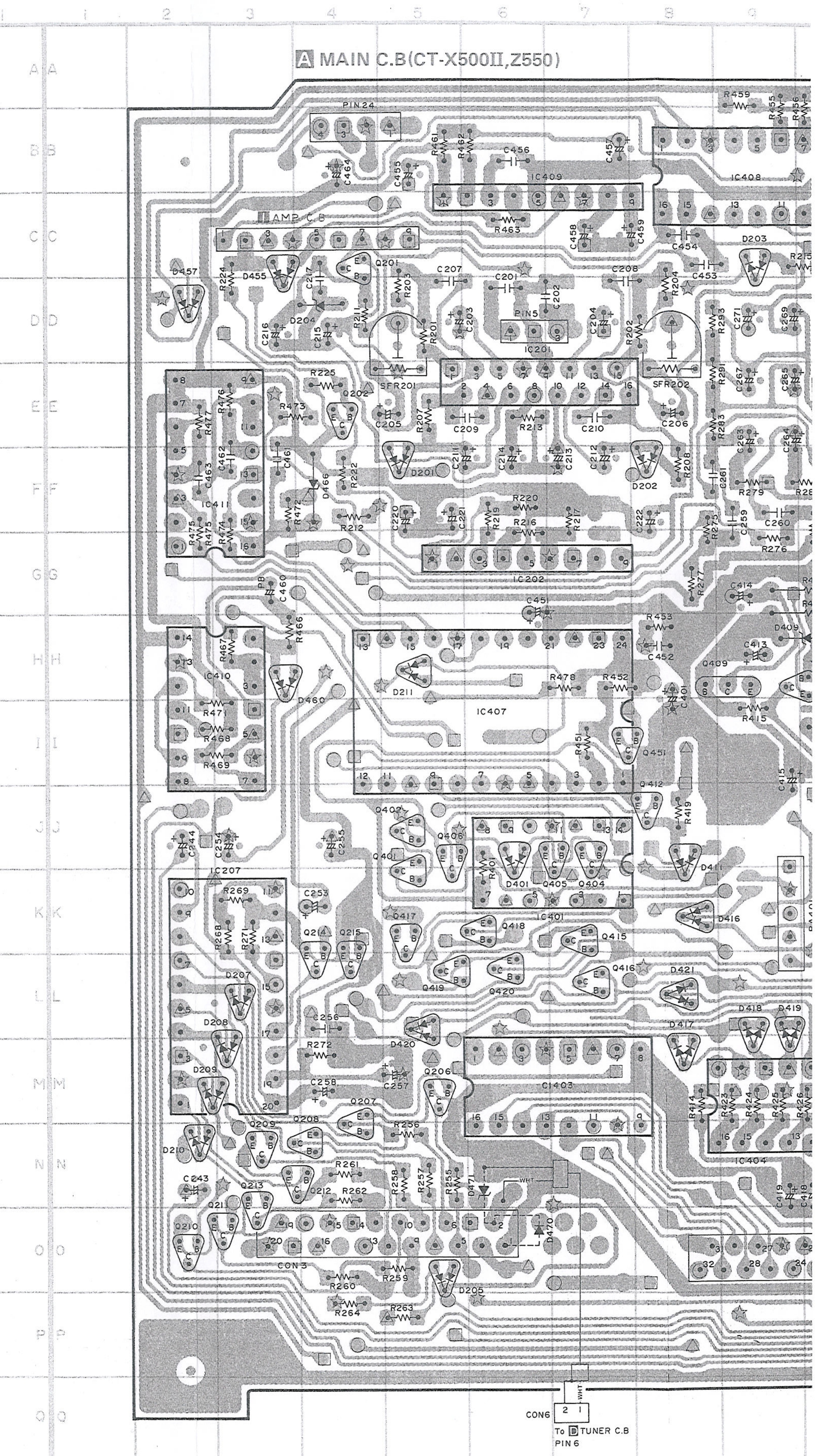
A MAIN C.B(CT-X500II,Z550)
PIN 24
II AMP C.B
IC201
IC202
IC207
IC401
IC403
IC404
IC407
IC408
IC409
IC410
IC411
SFR201
SFR202
CON 3
CON6
To B TUNER C.B
PIN 6
WHT

A MAIN C.B(CT-X500II,Z550)

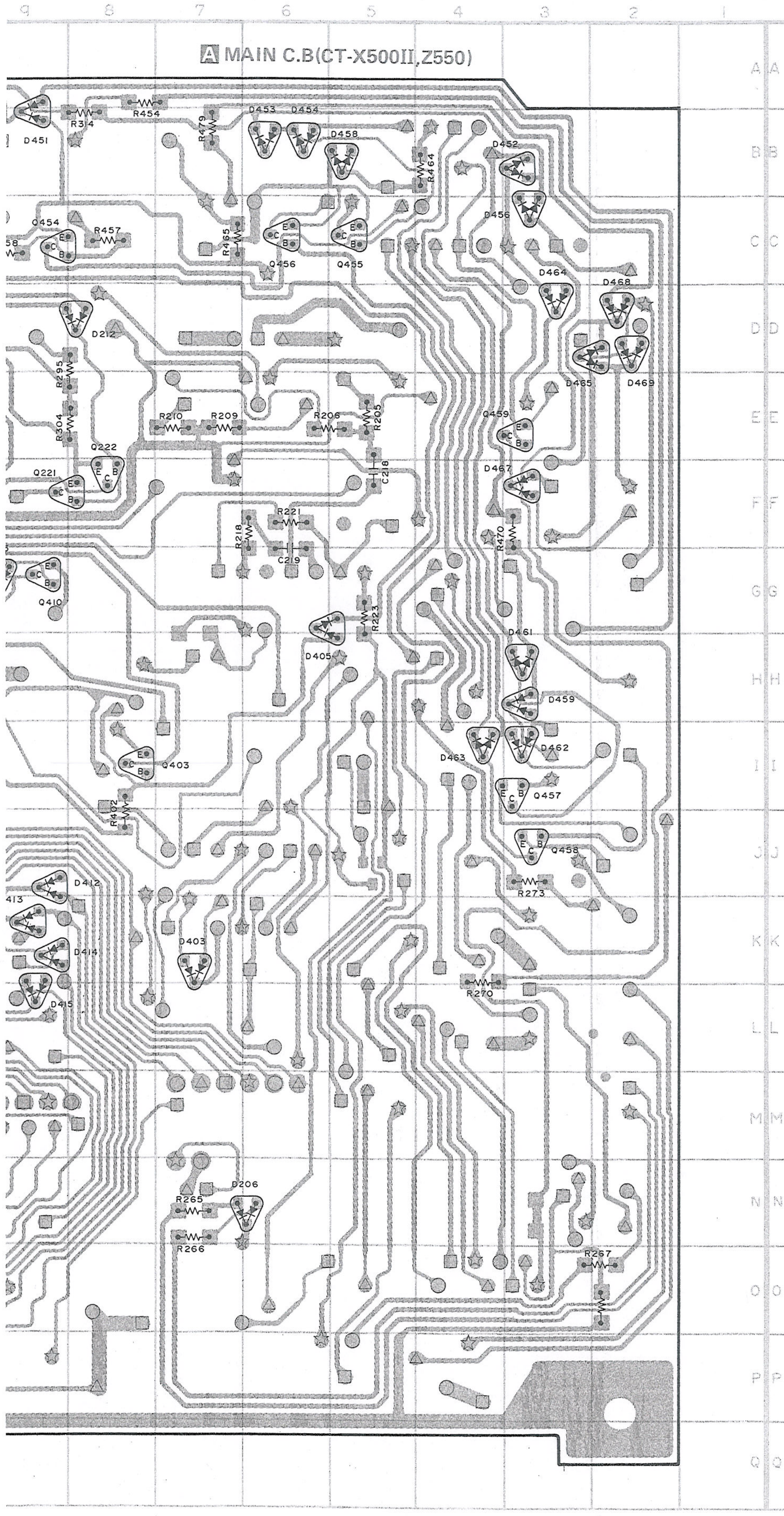
D451
D453
D454
D452
Q454
Q456
Q455
D464
D468
D465
D469
D212
Q222
Q221
Q410
D405
D461
D459
D463
D462
D457
Q403
D412
D414
D415
D403
D206
R265
R266
R267

A MAIN C.B(CT-X500II,Z550)

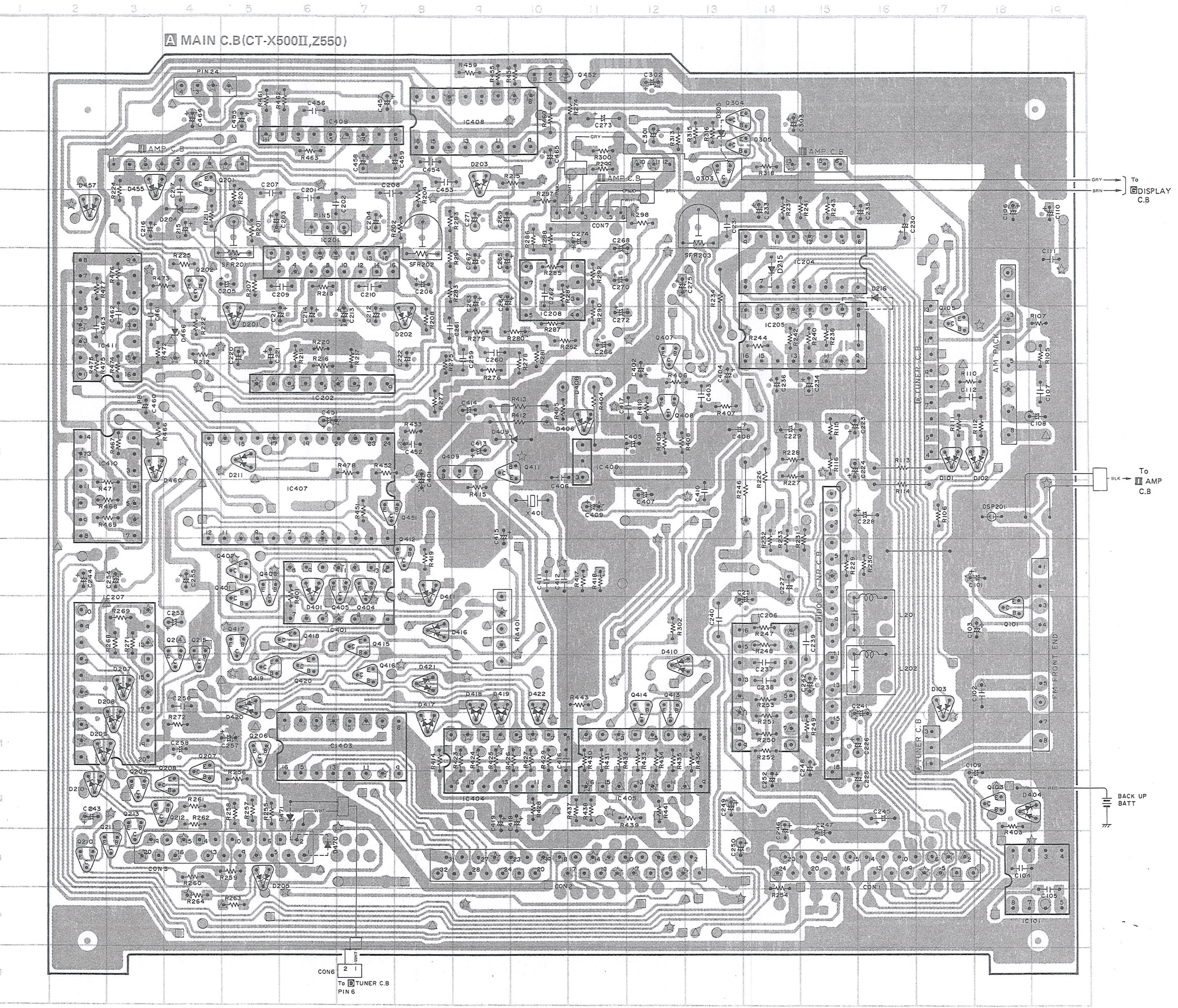
PIN24
IC409
IC408
Q452
Q304
Q305
Q303
AMP C.B
IC201
PIN5
SFR201
SFR202
SFR203
IC411
IC202
IC208
IC204
IC205
D215
D216
CON7
GRY
BRN
To
G DISPLAY
C.B
IC410
IC407
IC406
X401
Q411
IC401
IC207
IC403
IC404
IC405
IC206
L201
L202
TUNER C.B
AM PACK
FM FRONT END
D101
D102
Q101
Q105
DSP201
BLK
To
E AMP
C.B
D404
BACK UP
BATT
IC101
CON1
CON2
CON3
CON6
To D TUNER C.B
PIN 6

D TUNER C.B (CT-X500II/Z550)

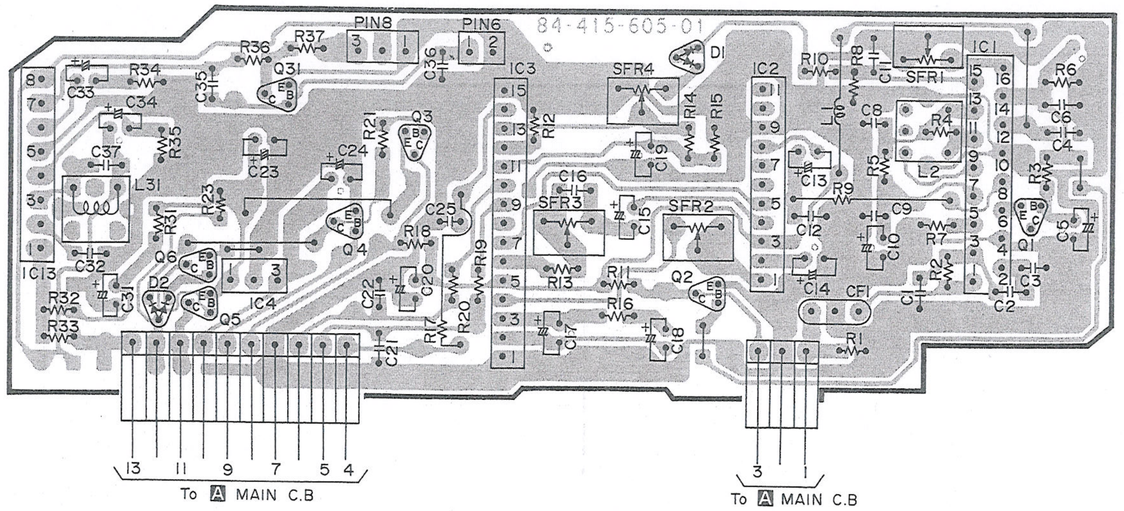
84-415-605-01
PIN8
PIN6
IC1
IC2
IC3
IC13
SFR1
SFR2
SFR3
SFR4
L31
13 11 9 7 5 4
To A MAIN C.B
3 1
To A MAIN C.B

E TUNER C.B (CT-X300II/Z350,X400II/Z450)

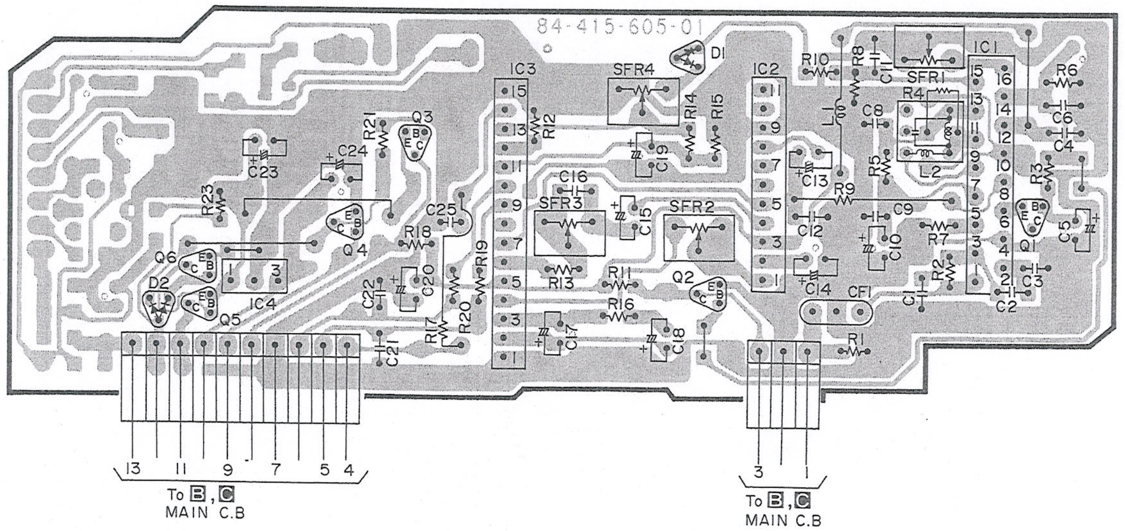
84-415-605-01
IC1
IC2
IC3
IC4
13 11 9 7 5 4
To B, C MAIN C.B
3 1
To B, C MAIN C.B

I AMP C.B.

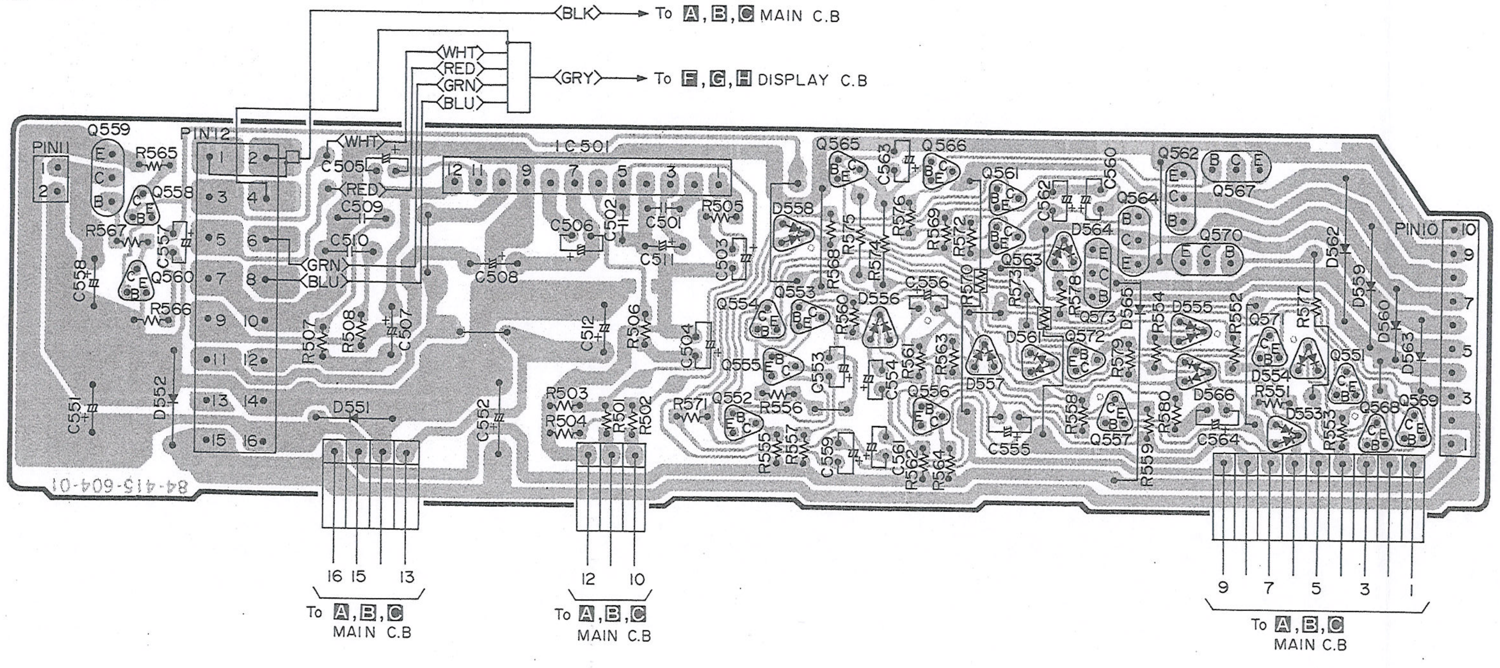
BLK
To A, B, C MAIN C.B
WHT
RED
GRN
BLU
GRY
To F, G, H DISPLAY C.B
PIN11
PIN12
PIN10
IC501
84-415-604-01
16 15 13
To A, B, C MAIN C.B
12 10
To A, B, C MAIN C.B
9 7 5 3 1
To A, B, C MAIN C.B

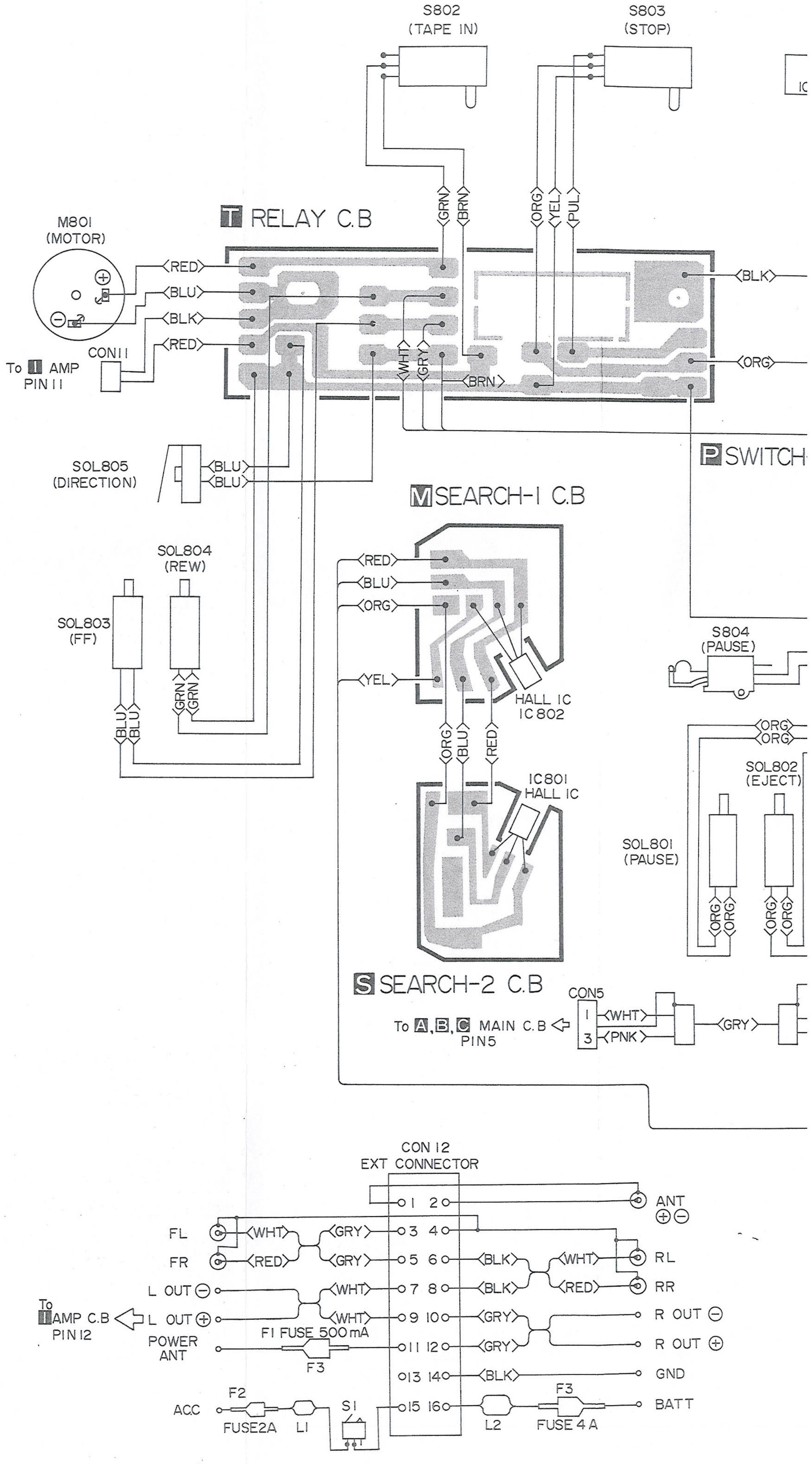
S802
(TAPE IN)
S803
(STOP)
M801
(MOTOR)
T RELAY C.B
To I AMP PIN11
CON11
SOL805
(DIRECTION)
SOL804
(REW)
SOL803
(FF)
M SEARCH-1 C.B
HALL IC
IC802
IC801
HALL IC
P SWITCH
S804
(PAUSE)
SOL802
(EJECT)
SOL801
(PAUSE)
S SEARCH-2 C.B
CON5
To A, B, C MAIN C.B PIN5
CON 12
EXT CONNECTOR
ANT
FL
FR
L OUT ⊖
L OUT ⊕
To I AMP C.B PIN12
POWER ANT
F1 FUSE 500 mA
F3
ACC
F2
FUSE2A
L1
S1
L2
FUSE 4 A
RL
RR
R OUT ⊖
R OUT ⊕
GND
BATT

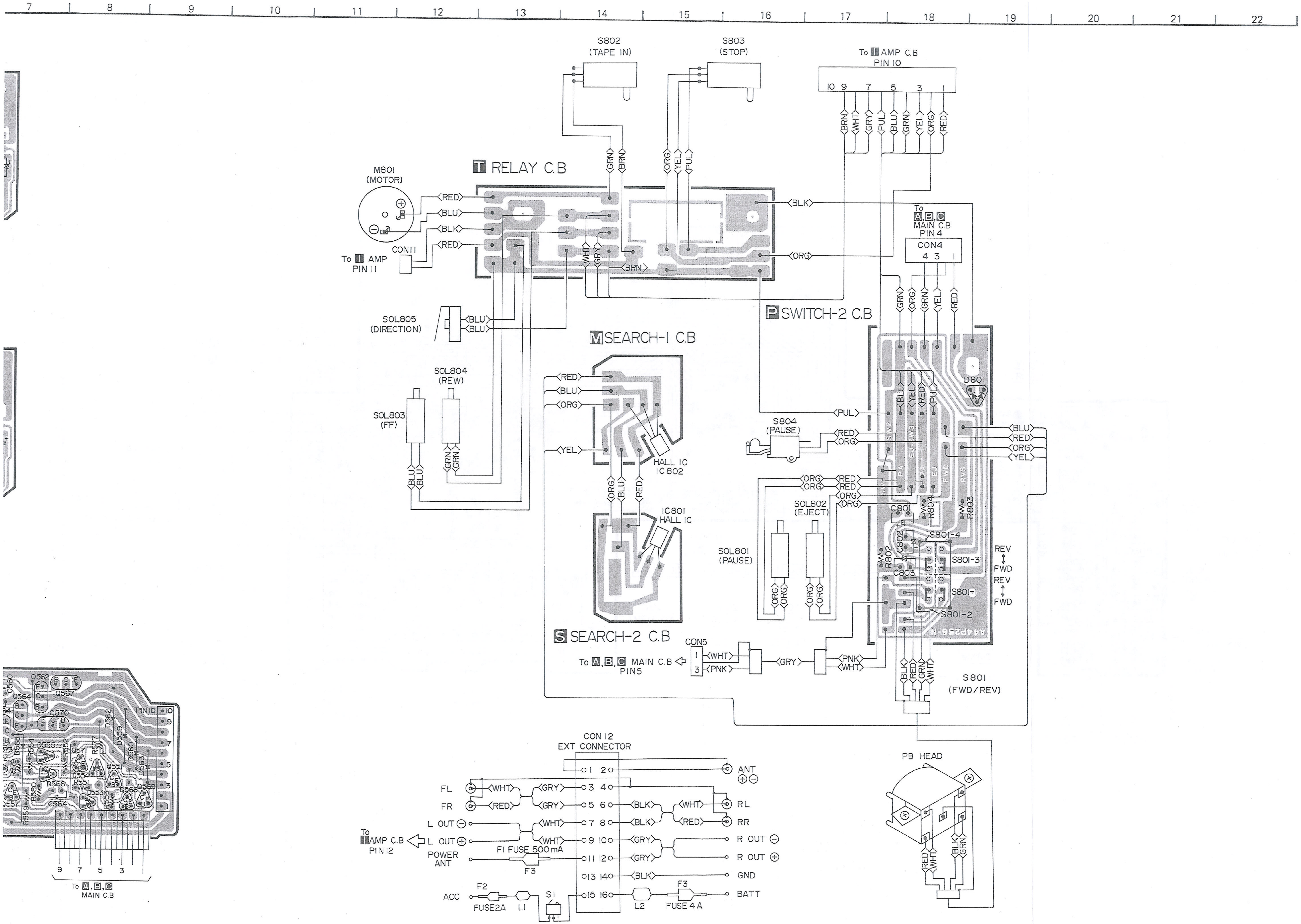
7
8
9
10
11
12
13
14
15
16
17
18
19
20
21
22
S802
(TAPE IN)
S803
(STOP)
To I AMP C.B
PIN 10
10 9 7 5 3 1
BRN
WHT
GRY
PUL
BLU
GRN
YEL
ORG
RED
T RELAY C.B
M801
(MOTOR)
RED
BLU
BLK
RED
CON11
To I AMP
PIN 11
BLK
ORG
BRN
WHT
GRY
To A,B,C
MAIN C.B
PIN 4
CON4
4 3 1
P SWITCH-2 C.B
SOL805
(DIRECTION)
M SEARCH-1 C.B
SOL804
(REW)
SOL803
(FF)
HALL IC
IC802
IC801
HALL IC
D801
S804
(PAUSE)
SOL802
(EJECT)
SOL801
(PAUSE)
C801
R804
R803
C802
R802
C803
S801-4
S801-3
S801-1
S801-2
REV
FWD
REV
FWD
A44P256-R
S SEARCH-2 C.B
CON5
To A,B,C MAIN C.B
PIN5
PNK
S801
(FWD/REV)
PB HEAD
CON 12
EXT CONNECTOR
FL
FR
L OUT ⊖
L OUT ⊕
POWER
ANT
ACC
F1 FUSE 500mA
F3
F2
FUSE2A
L1
S1
L2
F3
FUSE 4 A
ANT ⊕⊖
RL
RR
R OUT ⊖
R OUT ⊕
GND
BATT
To I AMP C.B
PIN 12
PIN10
9 7 5 3 1
To A,B,C
MAIN C.B
Q562
Q567
Q564
Q570
D555
D565
R554
R552
Q57
R577
D562
D559
D560
D563
D554
R551
D553
Q551
Q568
Q569
D566
C564
R580
R559
Q557
R553
R550

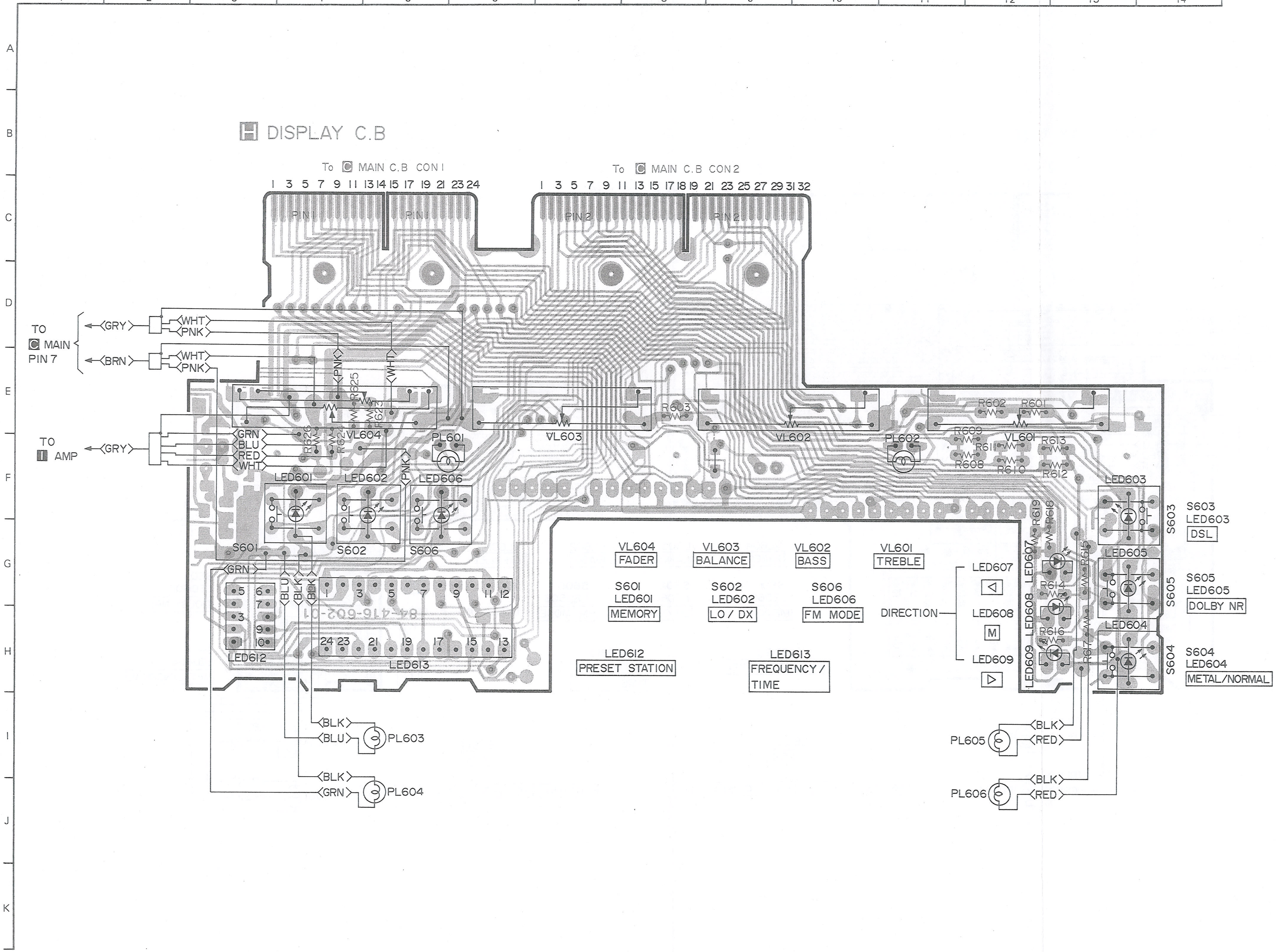
H DISPLAY C.B
To C MAIN C.B CON1
1 3 5 7 9 11 13 14 15 17 19 21 23 24
To C MAIN C.B CON2
1 3 5 7 9 11 13 15 17 18 19 21 23 25 27 29 31 32
PIN1
PIN1
PIN2
PIN2
TO
C MAIN
PIN 7
GRY
BRN
WHT
PNK
WHT
PNK
TO
I AMP
GRY
GRN
BLU
RED
WHT
PNK
WHT
PNK
R625
R623
R626
R624
R622
VL604
PL601
VL603
R603
VL602
PL602
R602
R601
R609
VL601
R613
R611
R608
R610
R612
LED601
LED602
LED606
LED603
S601
S602
S606
S603
LED603
DSL
LED605
S605
LED605
DOLBY NR
LED604
S604
LED604
METAL/NORMAL
R619
R618
LED607
R615
R614
LED608
R616
R617
LED609
VL604
FADER
VL603
BALANCE
VL602
BASS
VL601
TREBLE
LED607
◁
DIRECTION
LED608
M
LED609
▷
S601
LED601
MEMORY
S602
LED602
LO / DX
S606
LED606
FM MODE
GRN
BLU
BLK
BLK
LED612
LED613
84-416-602-01
LED612
PRESET STATION
LED613
FREQUENCY / TIME
BLK
BLU
PL603
BLK
GRN
PL604
BLK
RED
PL605
BLK
RED
PL606
1 2 3 4 5 6 7 8 9 10 11 12 13 14
A B C D E F G H I J K

G DISPLAY C.B

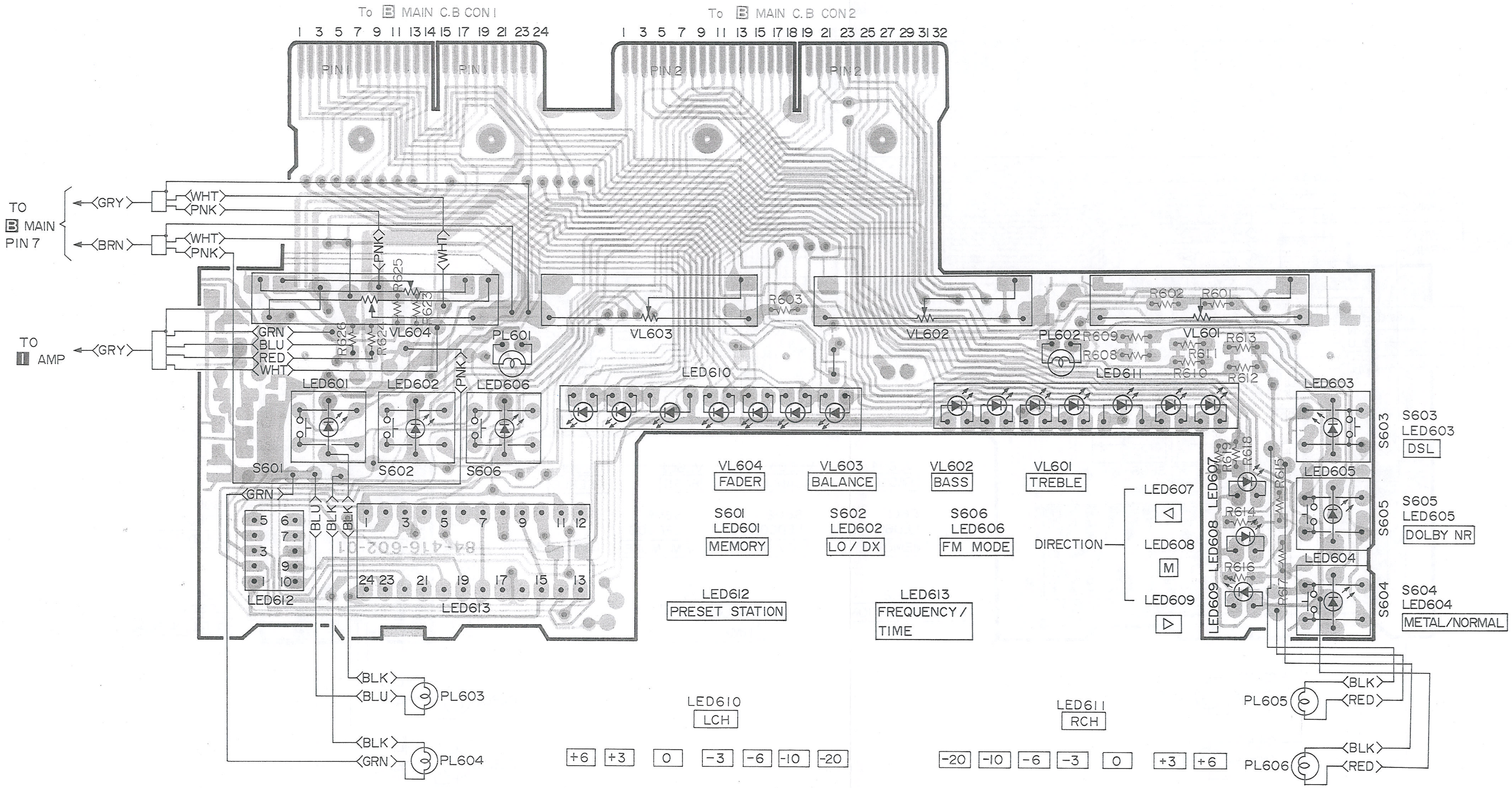
To B MAIN C.B CON 1
To B MAIN C.B CON 2
1 3 5 7 9 11 13 14 15 17 19 21 23 24
1 3 5 7 9 11 13 15 17 18 19 21 23 25 27 29 31 32
PIN 1
PIN 2
TO B MAIN PIN 7
GRY
WHT
PNK
BRN
TO I AMP
GRN
BLU
RED
R626
R624
R625
R623
VL604
VL603
VL602
VL601
R603
R602
R601
R609
R608
R613
R611
R610
R612
PL601
PL602
LED601
LED602
LED606
LED610
LED611
LED603
LED605
LED604
LED607
LED608
LED609
R619
R618
R615
R614
R616
R617
S601
S602
S606
S603
S605
S604
LED612
LED613
84-416-602-01
1 3 5 7 9 11 12
24 23 21 19 17 15 13
5 6 7 3 9 1 10
BLK
VL604 FADER
VL603 BALANCE
VL602 BASS
VL601 TREBLE
S601 LED601 MEMORY
S602 LED602 LO / DX
S606 LED606 FM MODE
DIRECTION
LED607 ◁
LED608 M
LED609 ▷
S603 LED603 DSL
S605 LED605 DOLBY NR
S604 LED604 METAL/NORMAL
LED612 PRESET STATION
LED613 FREQUENCY / TIME
PL603
PL604
PL605
PL606
LED610 LCH
LED611 RCH
+6 +3 0 −3 −6 −10 −20
−20 −10 −6 −3 0 +3 +6

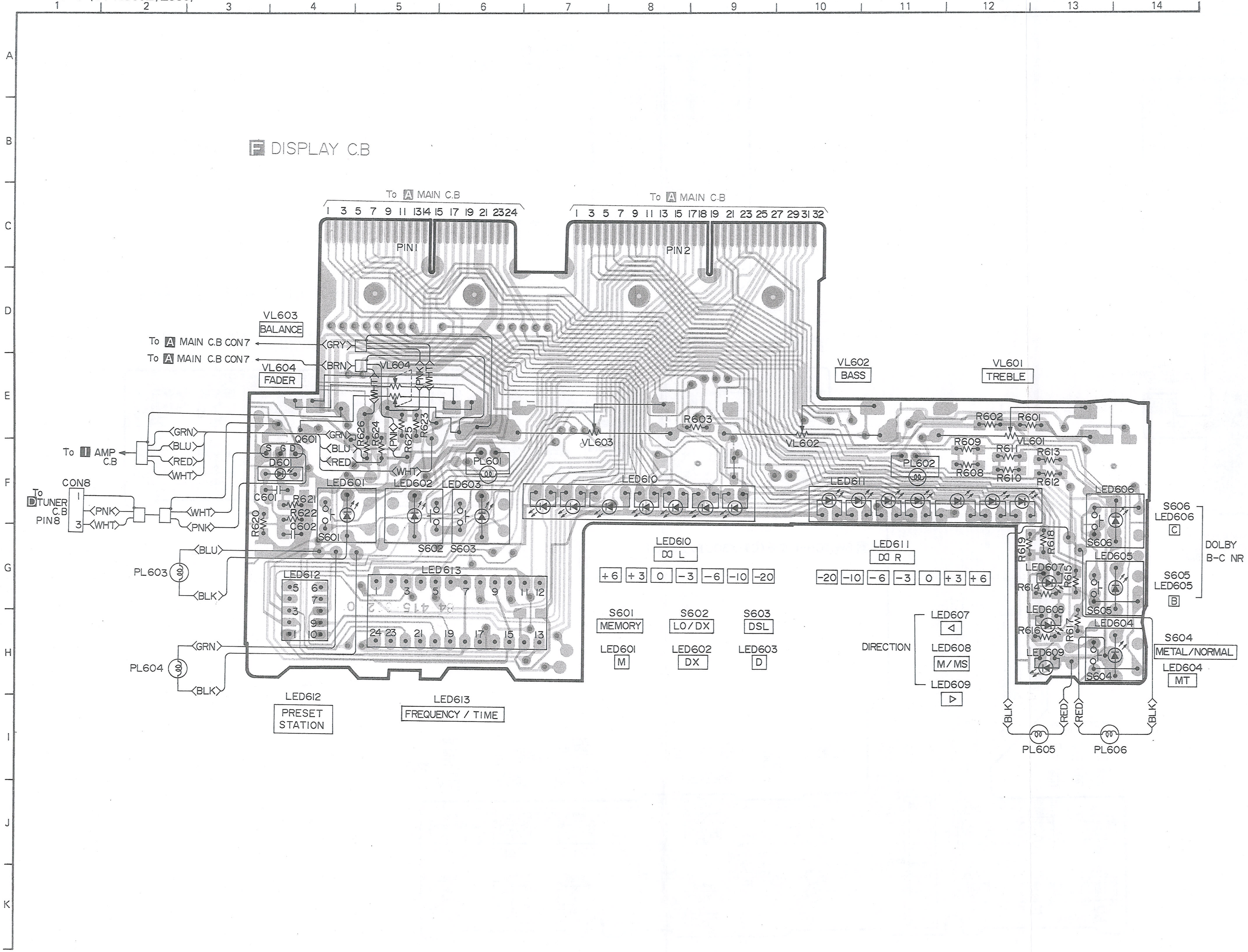
F DISPLAY C.B
To A MAIN C.B
1 3 5 7 9 11 13 14 15 17 19 21 23 24
PIN1
To A MAIN C.B
1 3 5 7 9 11 13 15 17 18 19 21 23 25 27 29 31 32
PIN2
VL603
BALANCE
To A MAIN C.B CON7
To A MAIN C.B CON7
VL604
FADER
GRY
BRN
PNK
WHT
GRN
BLU
RED
To I AMP C.B
CON8
To D TUNER C.B PIN8
Q601
D601
C601
R620
R621
R622
C602
R623
R624
R625
R626
LED601
LED602
LED603
S601
S602
S603
PL601
PL603
PL604
BLK
LED612
LED613
VL603
R603
VL602
BASS
VL601
TREBLE
R601
R602
R608
R609
R610
R611
R612
R613
PL602
LED610
LED611
LED606
LED605
LED604
LED607
LED608
LED609
R614
R615
R616
R617
R618
R619
S604
S605
S606
LED610
DD L
+6 +3 0 -3 -6 -10 -20
LED611
DD R
-20 -10 -6 -3 0 +3 +6
S601
MEMORY
LED601
M
S602
LO/DX
LED602
DX
S603
DSL
LED603
D
DIRECTION
LED607
◁
LED608
M/MS
LED609
▷
S606
LED606
C
S605
LED605
B
DOLBY B-C NR
S604
METAL/NORMAL
LED604
MT
LED612
PRESET STATION
LED613
FREQUENCY / TIME
PL605
PL606

M SWITCH-1 C.B(CT-X500II/Z550)

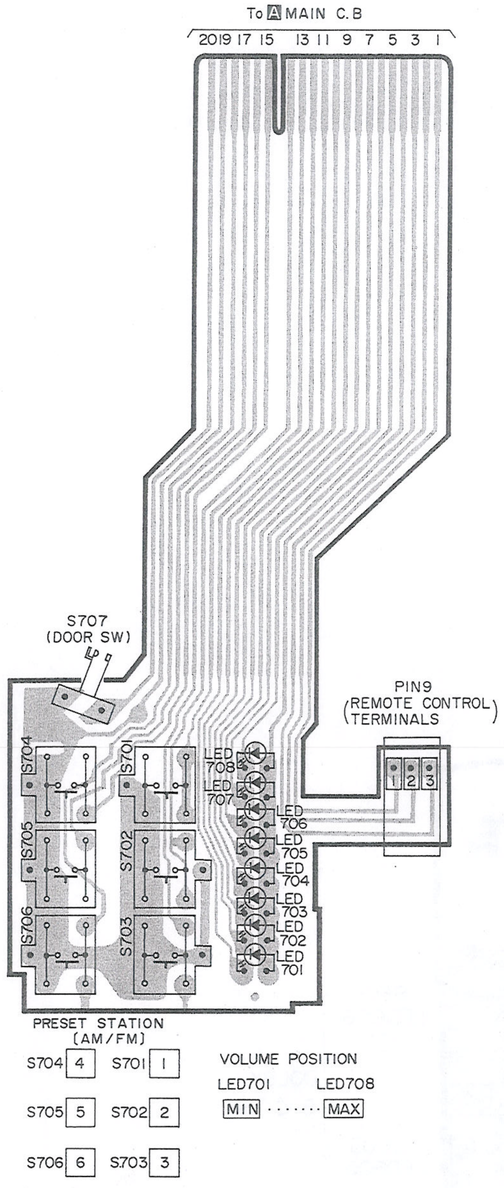
To A MAIN C.B
20 19 17 15 13 11 9 7 5 3 1
S707 (DOOR SW)
PIN9 (REMOTE CONTROL TERMINALS)
1 2 3
S704
S701
S705
S702
S706
S703
LED 708
LED 707
LED 706
LED 705
LED 704
LED 703
LED 702
LED 701
PRESET STATION (AM/FM)
S704 4
S701 1
S705 5
S702 2
S706 6
S703 3
VOLUME POSITION
LED701 LED708
MIN ······· MAX

N SWITCH-1 C.B (CT-X400II/Z450)

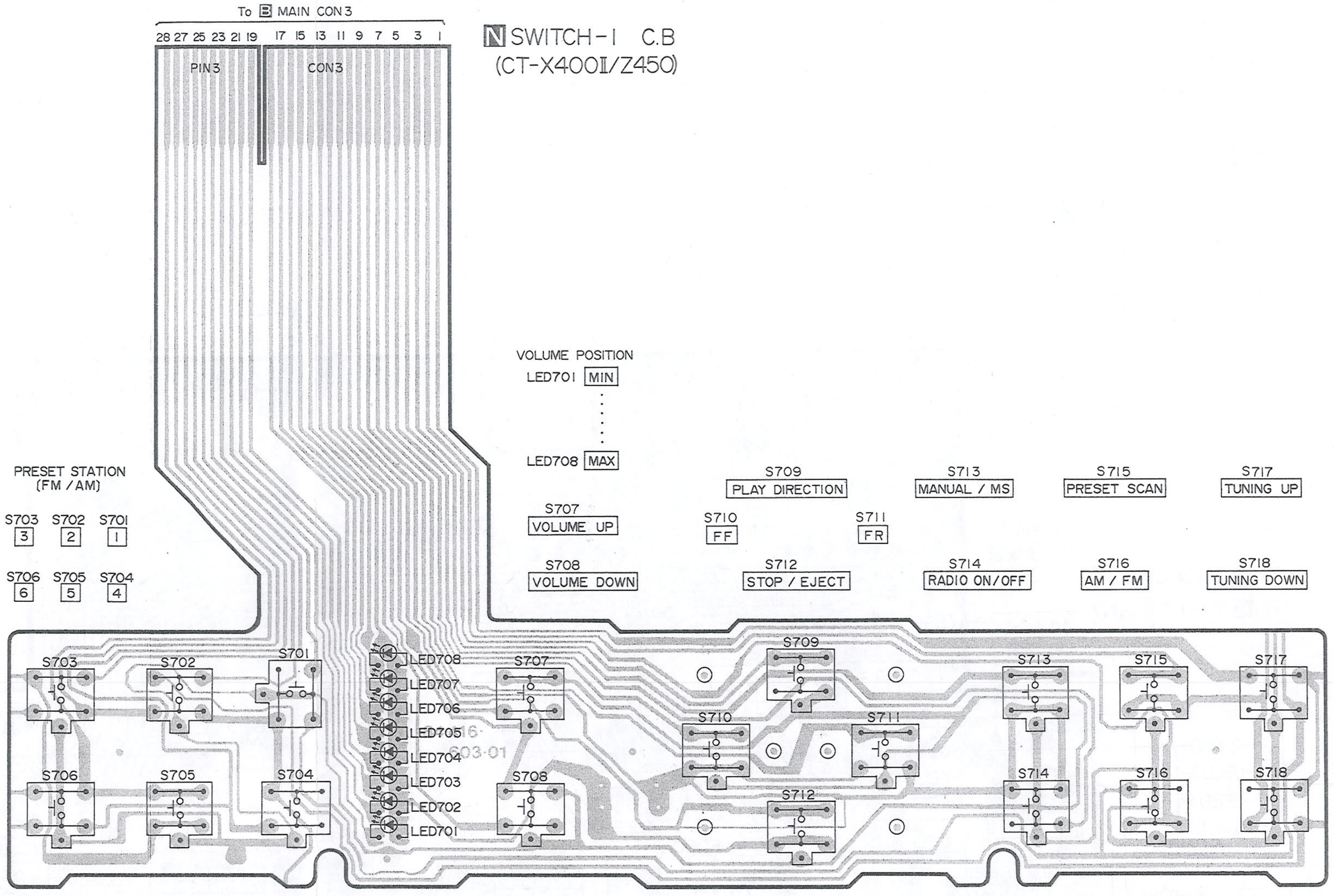
To B MAIN CON3
28 27 25 23 21 19 17 15 13 11 9 7 5 3 1
PIN3
CON3
VOLUME POSITION
LED701 MIN
LED708 MAX
PRESET STATION (FM / AM)
S703 3
S702 2
S701 1
S706 6
S705 5
S704 4
S707 VOLUME UP
S708 VOLUME DOWN
S709 PLAY DIRECTION
S710 FF
S711 FR
S712 STOP / EJECT
S713 MANUAL / MS
S714 RADIO ON/OFF
S715 PRESET SCAN
S716 AM / FM
S717 TUNING UP
S718 TUNING DOWN
S703
S702
S701
S706
S705
S704
LED708
LED707
LED706
LED705
LED704
LED703
LED702
LED701
S707
S708
S709
S710
S711
S712
S713
S714
S715
S716
S717
S718

O SWITCH-1 C.B(CT-X300II/Z350)

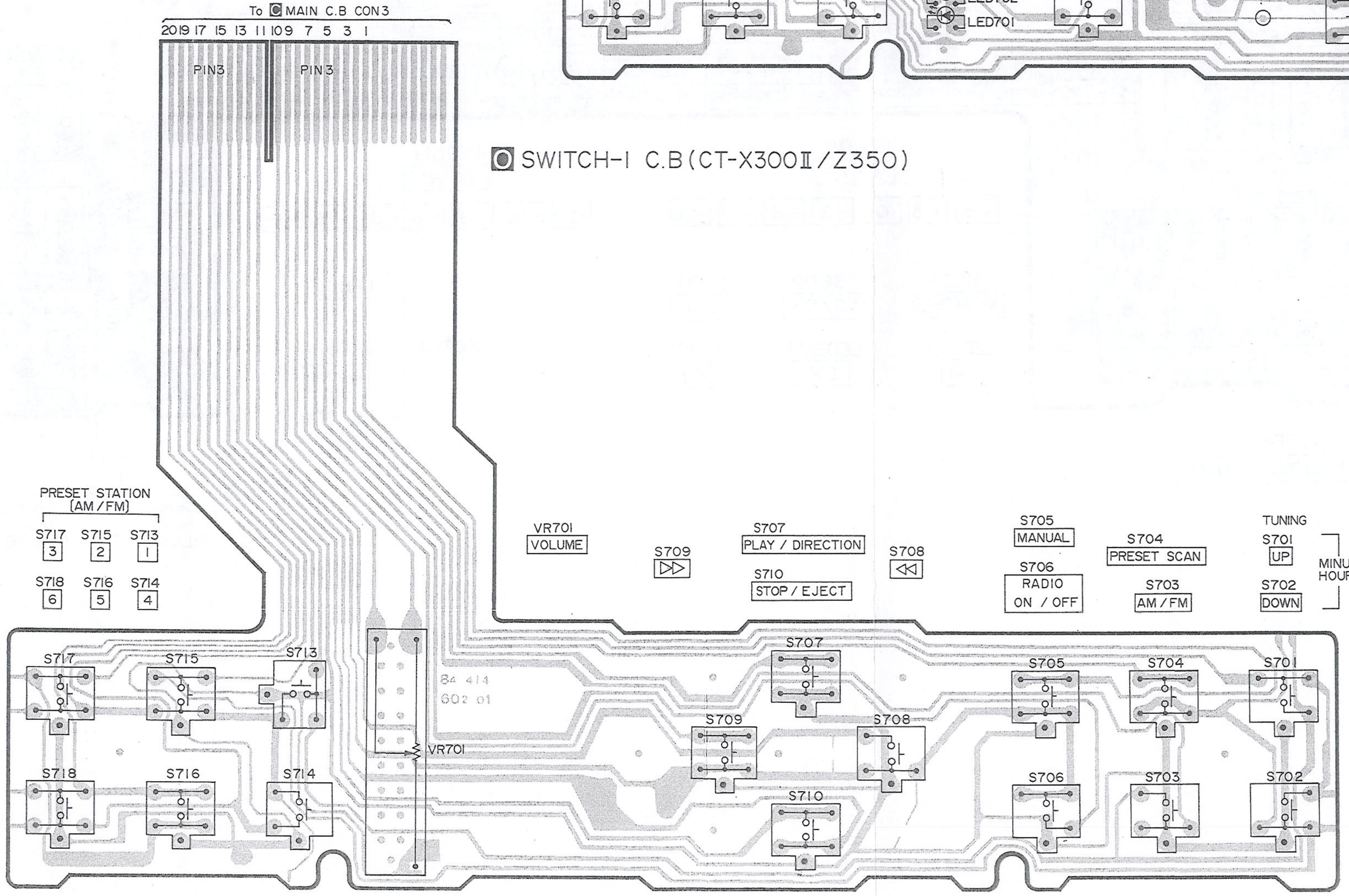
To C MAIN C.B CON3
20 19 17 15 13 11 10 9 7 5 3 1
PIN3
PIN3
PRESET STATION (AM/FM)
S717 3
S715 2
S713 1
S718 6
S716 5
S714 4
VR701 VOLUME
S709 ▷▷
S707 PLAY / DIRECTION
S710 STOP / EJECT
S708 ◁◁
S705 MANUAL
S706 RADIO ON / OFF
S704 PRESET SCAN
S703 AM / FM
TUNING
S701 UP
S702 DOWN
MINUTE HOUR
S717
S715
S713
S718
S716
S714
VR701
S707
S709
S708
S710
S705
S704
S701
S706
S703
S702

Practical Service Figure
[CT-X300Ⅱ, Z350]
[CT-X400Ⅱ, Z450]
[CT-X500Ⅱ, Z550]

RADIO SECTION

Sensitivity:	
(IHF, THD 3%)	FM 10±5dB (at 97.9MHz)
(S/N 20dB)	AM 31±5dB (at 1000kHz or 999kHz)
Intermediate frequency:	FM 10.7MHz AM 450kHz
FM Separation:	28±5dB

TAPE PLAYER SECTION

Channel separation:	More than 25dB
Take-up torque:	55±15g-cm (FWD, REV FWD)
FF/REW torque:	95±25g-cm
Back tension:	3±2g-cm (FWD, REV FWD)

• ADJUSTMENT

1. PB Level Adjustment
Settings: • Test tape: TTA-161
• Test point: TP101 (Lch)
TP102 (Rch)
• Dolby NR SW: OFF
• Adjustment location: SFR201 (Lch)
SFR202 (Rch)
Method: Play back the test tape and adjust so that the output is 580mV.

2. VU Level Adjustment
Settings: • Test tape: TTA-161
• Adjustment location: SFR203 (Lch)
Method: Play back the test tape and adjust so that the "Lch" LED of VU meter becomes the same level with "Rch" LED.

4. Separation Adjustment (1)
Settings: • Test point: SP output
• Radio ON/OFF SW: ON
• FM/AM SW: FM
• LO/DX SW: DX
• Input signal: 87.9MHz, 66dB
• Memory SW: Depress to set the input frequency.
• Adjustment location: SFR3
Method: Adjust so that the separation becomes maximum.

5. Separation Adjustment (2)
Settings: • Test point: SP output
• Radio ON/OFF SW: ON
• FM/AM SW: FM
• LO/DX SW: DX
• Input signal: 87.9MHz, 32dB
• Memory SW: Depress to set the input frequency.
• Adjustment location: SFR4
Method: Adjust for 5dB of the separation.

3. 19kHz Signal Adjustment
Settings: • Test point: SP output
• Radio ON/OFF SW: ON
• FM/AM SW: FM
• LO/DX SW: DX
• Input signal: 87.9MHz, 66dB
• Memory SW: Depress to set the input frequency.
• Adjustment location: SFR2
Method: Adjust for minimum output of the 19kHz pilot signal.

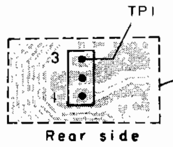

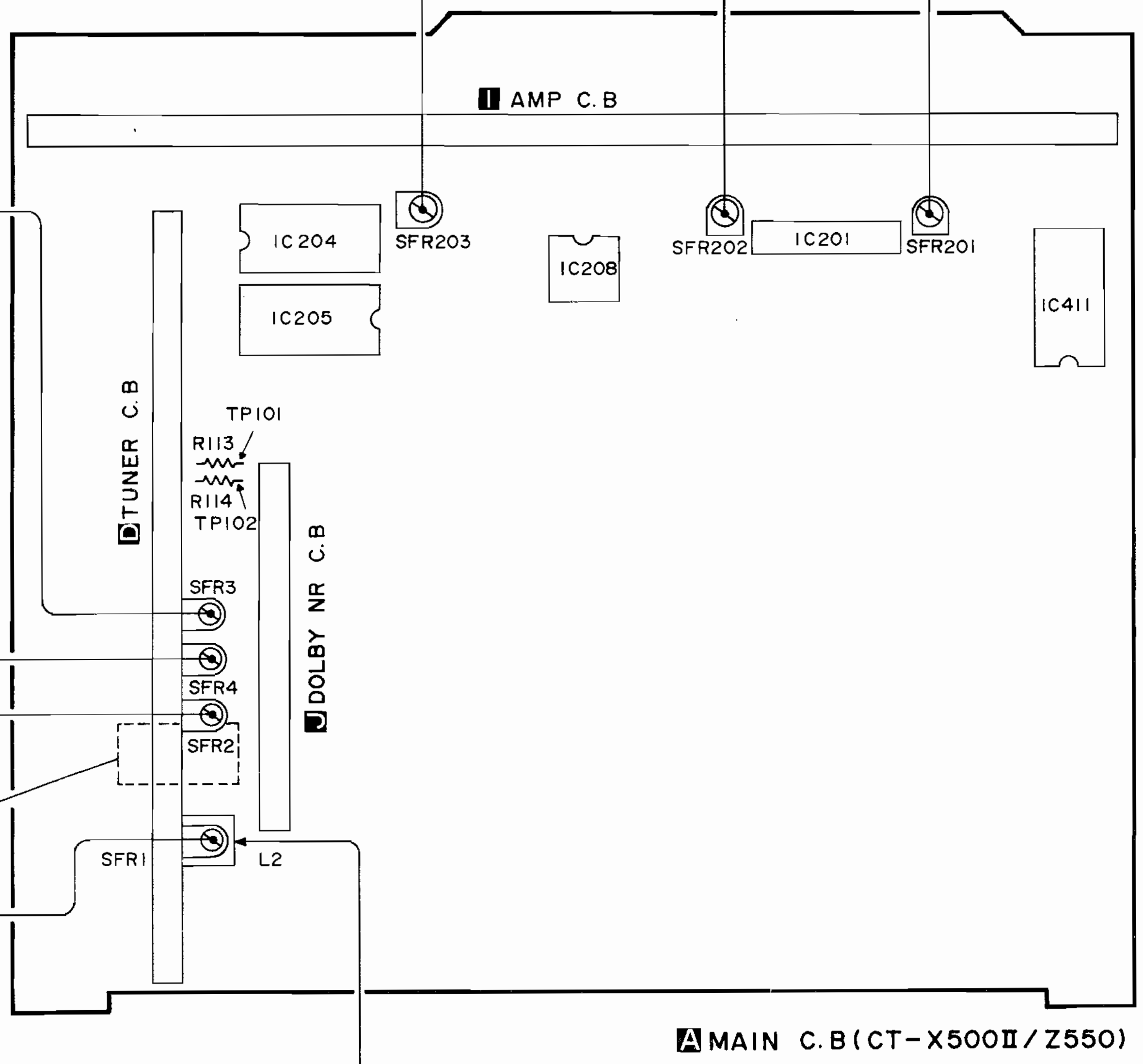

1. Auto Stop Adjustment
Settings: • Radio ON/OFF SW: ON
• FM/AM SW: FM
• Adjustment location: SFR1
Method: Scan the frequency to depress TUNING SW, and adjust so that the frequency automatically stops at 87.9MHz

2. FM Quadrature IF Adjustment
Settings: • Test point: TP1
• Radio ON/OFF SW: ON
• FM/AM SW: FM
• LO/DX SW: LO
• Input signal: 87.85MHz, 66dB
87.95MHz, 66dB
• Adjustment location: L2
Method: Adjust so that both of them become 2.5V.

EXPLODED VIEW-1

Ref. No.	Part No.	Description	Ref. No.	Part No.	Description	Ref. No.	Part No.	Description
A	87-252-093-21	U+3−5 [RED]	F	87-238-072-11	Q+2.6−5 [BLACK]	K	87-356-074-21	VT$_1$+2.6−8 [RED]
B	87-261-070-21	V+2.6−3	G	87-238-073-21	Q+2.6−6 [BLACK]	L	87-231-072-21	Q+2.6−5
C	87-261-072-21	V+2.6−5	H	87-352-533-31	VT$_2$+1.7−6[BLACK]	M	87-238-071-11	Q+2.6−4
D	87-081-527-01	QTT+2.6−5	I	87-356-035-21	VT$_1$+2−6 [RED]	N	87-352-533-31	VT$_2$+1.7−6
E	87-251-093-21	U+3−5	J	87-067-192-01	VTT+2.6−10 [RED]			

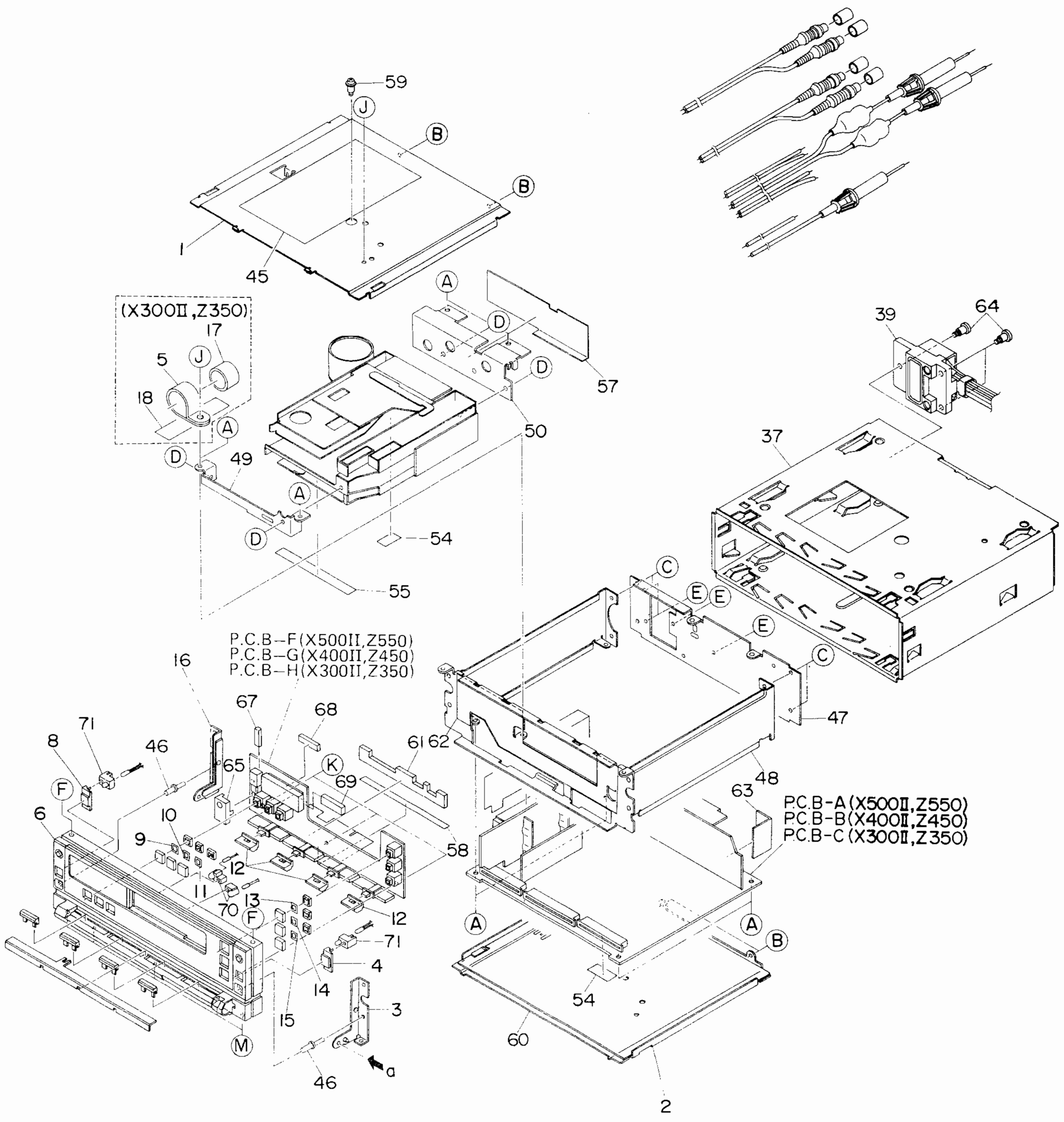
59
J
B
B
1
45
(X300II,Z350)
17
5
J
18
A
D
49
A
D
A
D
D
57
50
54
55
39
64
37
C
E
E
E
C
47
48
P.C.B-F(X500II,Z550)
P.C.B-G(X400II,Z450)
P.C.B-H(X300II,Z350)
16
67
68
71
8
46
65
K
69
61
62
F
6
10
9
11
70
12
13
F
12
71
4
14
15
3
M
46
a
58
63
P.C.B-A(X500II,Z550)
P.C.B-B(X400II,Z450)
P.C.B-C(X300II,Z350)
A
A
B
54
60
2

(CT-X400II,Z450)

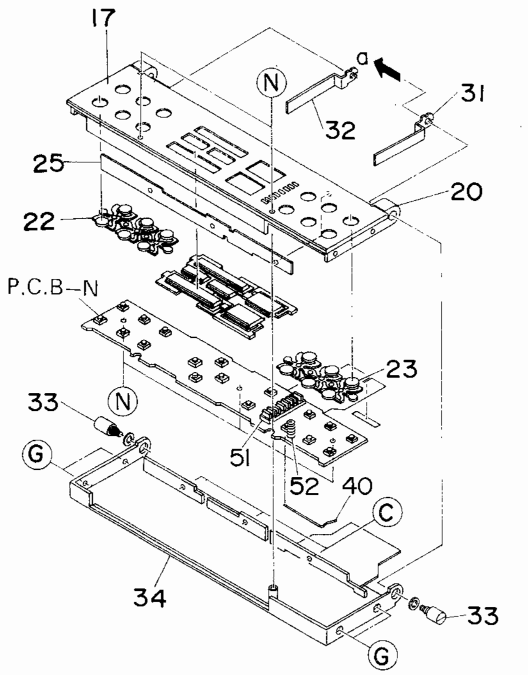
17
N
a
32
31
25
20
22
P.C.B-N
23
33
N
51
52
40
C
G
34
33
G

(CT-X300II,Z350)

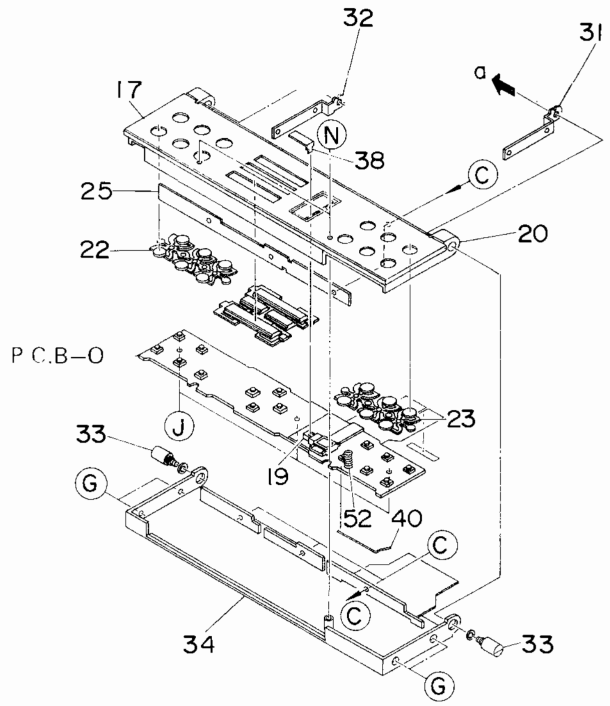
32
31
a
17
N
38
C
25
20
22
P.C.B-O
23
33
J
19
52
40
G
C
C
34
33
G

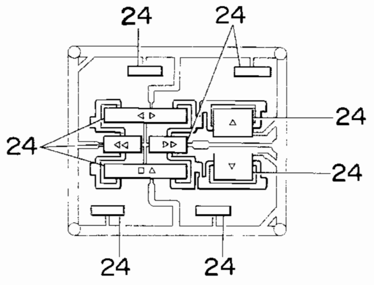
24
24
24
24
24
24
24
24

(CT-X500II,Z550)

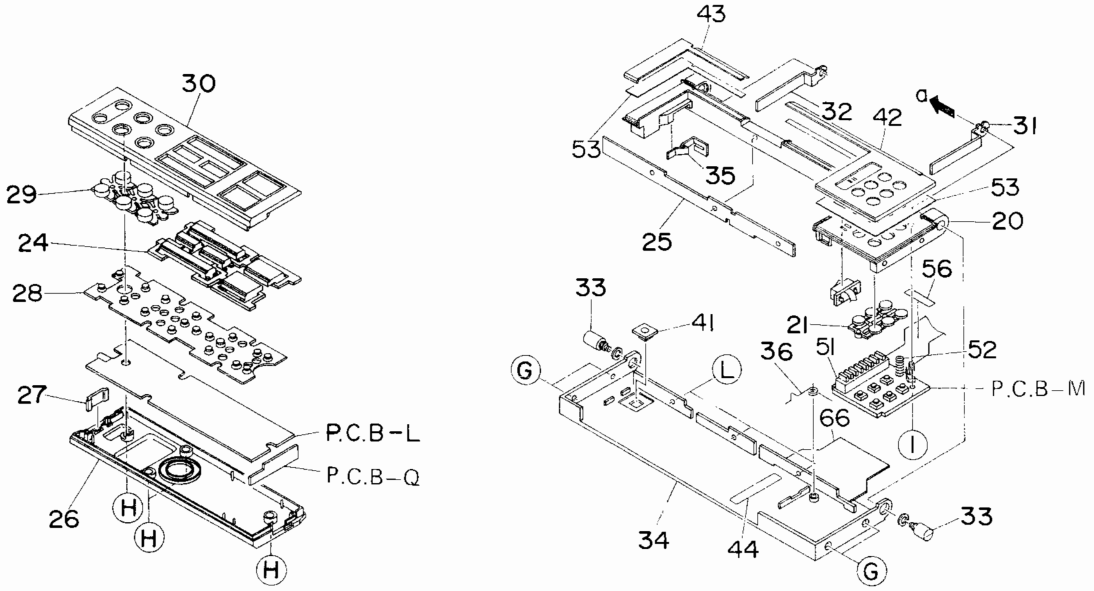
30
29
24
28
27
P.C.B-L
P.C.B-Q
26
H
H
H
43
a
31
32
42
53
35
53
25
20
56
33
41
21
51
52
G
36
L
P.C.B-M
66
I
34
44
33
G

MECHANICAL PARTS LIST

- ※-mark in this part list shows exclusive part.
- ★-mark means less required items availabilities may be limited.
- No avalilability part is warked with– – – in Part No. list.

Part No. changed to	Ref. No.	Part No.	Description	Common Model	Q'ty	
	1-1	84-415-216	TOP CASE	※	1	
	1-2	82-685-206	BOTTOM CASE		1	
	1-3	★84-415-250	HOLDER R Ass'y	※	1	
	1-4	★82-685-036	GUIDE R, RIGHT		1	
	1-5	★87-064-105	HOLDER, BATTERY (X300Ⅱ, Z350)		1	
	1-6	★84-414-001	FRONT PANEL (N) C Ass'y (X300Ⅱ, Z350)	※	1	
		★84-416-001	FRONT PANEL (N) B Ass'y (X400Ⅱ, Z450)	※	1	
		★84-415-001	FRONT PANEL (N) Ass'y (X500Ⅱ, Z550)	※	1	
	1-7	---	G CUSHION, BATTERY (X300Ⅱ, Z350)		1	
	1-8	★82-685-034	GUIDE L, RIGHT		1	
	1-9	★82-685-023	SHEET, MEMORY		1	
	1-10	★82-685-024	SHEET, LO 1 DX		1	
	1-11	★82-685-025	SHEET, DS1 (X500Ⅱ, Z550)		1	
		★82-685-006	SHEET, MONO 1 ST (X300Ⅱ, Z350, X400Ⅱ, Z450)		1	
	1-12	★82-685-237	KNOB A, SELECT		4	
	1-13	★82-685-020	SHEET, METAL		1	
	1-14	★82-685-021	SHEET, DOLBY B		1	
	1-15	★82-685-022	SHEET, DOLBY C (X500Ⅱ, Z550)		1	
		★82-685-025	SHEET, DSL (X300Ⅱ, Z350, X400Ⅱ, Z450)		1	
	1-16	★84-415-251	HOLDER L Ass'y	※	1	
	1-17	★84-414-005	NAME, CONTROL (N) C (X300Ⅱ)	※	1	
		★84-414-009	NAME, CONTROL (N) C (Z350)	※	1	
		★84-416-005	NAME, CONTROL (N) B (X400Ⅱ)	※	1	
		★84-416-009	NAME, CONTROL B Y (Z450)	※	1	
	1-18	---	HIMERON, BATTERY		1	
	1-19	★82-687-201	KNOB B, SELECT		1	
	1-20	★82-687-004	MOLD, CONTROL C (X300Ⅱ, Z350)		1	
		★82-686-001	MOLD, CONTROL B (X400Ⅱ, Z450)		1	
		★82-685-002	MOLD, CONTROL A (X500Ⅱ, Z550)		1	
	1-21	★82-685-014	PUSH-KEY, PRESET A (X500Ⅱ, Z550)		1	
	1-22	★84-415-025	PUSH-KEY, PRESET B (N) (X300Ⅱ, Z350, X400Ⅱ, Z450)		1	
	1-23	★82-686-007	PUSH-KEY, PRESET BB (X300Ⅱ, Z350, X400Ⅱ, Z450)		1	
	1-24	★82-685-027	KEY KNOB SET		1	
	1-25	★82-685-238	PLATE, FRONT CASE		1	
	1-26	★82-685-016	REAR CABINET, REMOTE CONTROLLER (X500Ⅱ, Z550)		1	
	1-27	★82-685-019	WINDOW, REMOTE CONTROLLER (X500Ⅱ, Z550)		1	
	1-28	★82-685-229	TOUCH POINT RUBBER (X500Ⅱ, Z550)		1	
	1-29	★84-415-025	PUSH-KEY, PRESET B (IN) (X500Ⅱ, Z550)	※	1	
	1-30	★84-415-009	CONTROLLER (X500Ⅱ, Z550)	※	1	
	1-31	★84-415-213	METAL FITTING R, SHAFT BEARING (X500Ⅱ, Z550)	※	1	
	1-32	★84-415-212	METAL FITTING L, SHAFT BEARING (X500Ⅱ, Z550)	※	1	
	1-33	★82-685-012	MOUNTING SCREW		2	
	1-34	★82-686-005	FRONT CASE B (X300Ⅱ, Z350, X400Ⅱ, Z450)		1	
		★82-685-001	FRONT CASE A (X500Ⅱ, Z550)		1	
	1-35	★82-685-217	P-SPRING, REMOTE CONTROL (X500Ⅱ, Z550)		1	
	1-36	★82-685-256	T-SPRING, REMOTE CONTROL (X500Ⅱ, Z550)		1	
	1-37	★84-415-201	CASE DIN Ass'y	※	1	
	1-38	★82-687-003	KNOB B, VOLUME (X300Ⅱ, Z350)		1	
	1-39	84-415-614	SOCKET 16P Ass'y	※	1	
	1-40	★84-415-254	KEY EARTH (X300Ⅱ, Z350, X400Ⅱ, Z450)	※	1	
	1-41	★82-685-013	WINDOW (X500Ⅱ, Z550)		1	
	1-42	★84-415-012	CONTROL NAME A (N) (X500Ⅱ)	※	1	
		84-415-026	CONTROL NAME A (N) (Z550)	※	1	
	1-43	★84-415-027	CONTROL NAME A B (N) (X500Ⅱ, Z550)	※	1	
	1-44	★81-193-010	CAUTION LABEL (X500Ⅱ, Z550)		1	
	1-45	---	LABEL, SPEC.		1	
	1-46	★84-415-016	PUSH-BUTTON, DIN	※	2	
	1-47	★84-415-205	BACK CHASSIS (N)	※	1	
	1-48	---	CHASSIS Ass'y		1	
	1-49	---	MECHANISM HOLDER A		1	
	1-50	---	MECHANISM HOLDER B (N)		1	
	1-51	★82-685-210	LED GUIDE, VOL (X400Ⅱ, Z450, X500Ⅱ, Z550)		1	
	1-52	★82-685-243	C-SPRING, EARTH		1	
	1-53	★82-685-261	ADHESIVE SHEET, CONTROL NAME (X500Ⅱ, Z550)		1	
	1-54	---	HIMERON, FRONT		2	
	1-55	---	INSULATION SHEET B		1	
	1-56	---	MYLER 7×29×0.07		1	
	1-57	---	INSULATION SHEET, POWER		1	
	1-58	---	INSULATION SHEET		1	
	1-59	★84-123-308	MOTOR SCREW (RED)		1	
	1-60	---	INSULATION SHEET, BOTTOM LID		1	
	1-61	---	CUSHION (N)		1	
	1-62	---	INSULATION CHASSIS (N)		1	
	1-63	---	FIBER		1	
	1-64	★87-067-285	M3 (CONNECTOR SCREW)		3	
	1-65	---	SHIELD PLATE, EYE		1	
	1-66	---	SHEET		1	
	1-67	---	SPACER, CH		1	
	1-68	---	SPACER, TU		1	
	1-69	---	G CUSHION		1	
	1-70	★84-415-210	LAMP HOLDER (N)	※	2	
	1-71	★82-685-253	LAMP HOLDER		2	

EXPLODED VIEW-2

Ref. No.	Part No.	Description
A	87-253-032-21	U+2-3
B	87-253-070-11	U+2.6-3
C	87-251-071-11	U+2.6-4
D	87-253-031-01	V+2-2
E	87-263-034-21	V+2-5
F	87-233-525-31	Q+1.7-2.5
G	87-233-032-01	Q+2-3
H	82-685-552-01	VS+2-5
I	87-081-284	W2.1-5-0.3
J	87-081-285	W2-6-0.3
K	87-081-971	PW1.7-3-0.3
L	87-441-003	STE-1.5
M	87-441-005	STE-2

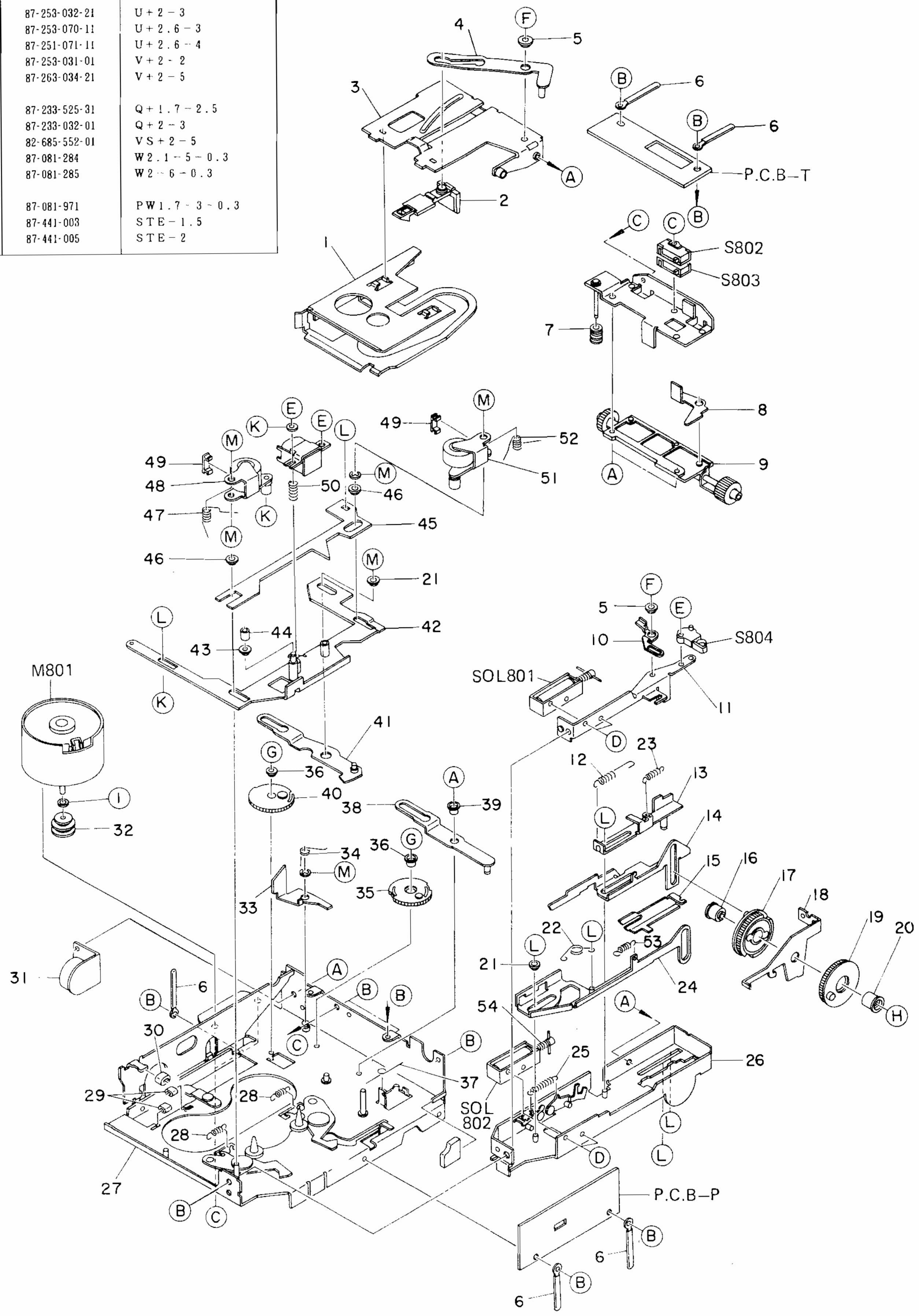

Part No. changed to	Ref. No.	Part No.	Description	Common Model	Q'ty	
	2-1	★82-685-455	CASSETTE CASE 30		1	
	2-2	★82-685-457	GUIDE, PACK 30 Ass'y		1	
	2-3	★82-685-451	ARM, C-HOLDER 30 Ass'y		1	
	2-4	★82-685-462	ARM, GUIDE 30 Ass'y		1	
	2-5	★82-685-467	METAL, GUIDE 30		2	
	2-6	87-038-039	WIRE BINDER		5	
	2-7	82-685-361	GEAR, WARM 30		1	
	2-8	★82-685-358	LEVER, SWITCH A30		1	
	2-9	★82-685-349	GUIDE, SET GEAR Ass'y		1	
	2-10	★82-685-450	RELEASER, LOCK 30		1	
	2-11	★82-685-443	S-S ANGLE		1	
	2-12	★82-685-498	SPRING, GUIDE ARM		1	
	2-13	★82-685-439	LEVER, GUIDE 30 Ass'y		1	
	2-14	★82-685-436	SET LEVER 30A Ass'y		1	
	2-15	★82-685-442	SET LEVER 30B		1	
	2-16	★82-685-470	CAM SHAFT B		1	
	2-17	82-685-409	CAM GEAR 30 Ass'y		1	
	2-18	★82-685-421	PLATE, GEAR L30		1	
	2-19	82-685-415	GEAR, PLAY 30 Ass'y		1	
	2-20	★82-685-469	CAM SHAFT A		1	
	2-21	★82-685-471	G COLLAR, HEAD BASE		2	
	2-22	★82-685-480	SPRING 30, HEAD BASE		1	
	2-23	★82-685-500	SPRING 30, SET LEVER		1	
	2-24	★82-685-432	PLAY LEVER 32 Ass'y		1	
	2-25	★82-685-497	LOCK SPRING		1	
	2-26	★82-685-385	HOLDER, SET GEAR		1	
	2-27	★82-685-301	CHASSIS 30 Ass'y		1	
	2-28	★82-685-495	SPRING, PLAY IDLER		2	
	2-29	★82-685-522	S CUSHION		2	
	2-30	★82-685-504	CUSHION RUBBER, HOLDER		1	
	2-31	★82-685-446	P-S Ass'y		1	
	2-32	★82-685-514	PULLEY, MOTOR 30		1	
	2-33	★82-685-400	STOPPER, C-CAM 30		1	
	2-34	★82-685-499	SPRING, C-CAM 30		1	
	2-35	82-685-386	C-CAM 30 Ass'y		1	
	2-36	★82-685-475	SLEEVE, MODE-CHANGER		2	
	2-37	★82-685-496	SPRING, BACK CAM		1	
	2-38	★82-685-394	C-LEVER 30 Ass'y		1	
	2-39	★82-685-473	METAL, C-LEVER		1	
	2-40	82-685-390	BACK CAM Ass'y		1	
	2-41	★82-685-397	BACK ARM 30 Ass'y		1	
	2-42	★82-685-327	HEAD BASE 30 Ass'y		1	
	2-43	★82-685-477	H COLLAR 32B		1	
	2-44	★82-685-476	H COLLAR 32A		1	
	2-45	★82-685-402	BACK LEVER, HEAD		1	
	2-46	★82-685-472	COLLAR, HEAD 30		2	
	2-47	★82-685-479	SPRING, PINCH LEVER R30		1	
	2-48	82-685-342	PINCH ROLLER R30 Ass'y		1	
	2-49	★82-685-384	GUARD, TAPE-JAMMING		2	
	2-50	★82-685-493	SPRING, AZIMUTH		1	
	2-51	82-685-335	PINCH ROLLER F30 Ass'y		1	
	2-52	★82-685-478	SPRING, PINCH LEVER F30		1	
	2-53	★82-685-501	SPRING, PLAY LEVER 30		1	
	2-54	★82-685-502	E-SPRING, BACK TENSION		1	

EXPLODED VIEW-3

Ref. No.	Part No.	Description
A	82-685-555-01	U+2−2.5
B	87-253-032-21	U+2−3
C	87-253-031-01	V+2−2
D	87-233-033-01	Q+2−4
E	87-081-945	PW1.2−3−0.25
F	87-081-971	PW1.7−3−0.13
G	87-081-489	PW1.7−3.5−0.25
H	87-081-944	PW1.5−3.5−0.25
I	87-081-464	PW1.8−5−0.5
J	87-081-498	PW2.1−5−0.13
K	87-081-817	PW6.2−9.5−0.5
L	87-441-005	STE−2

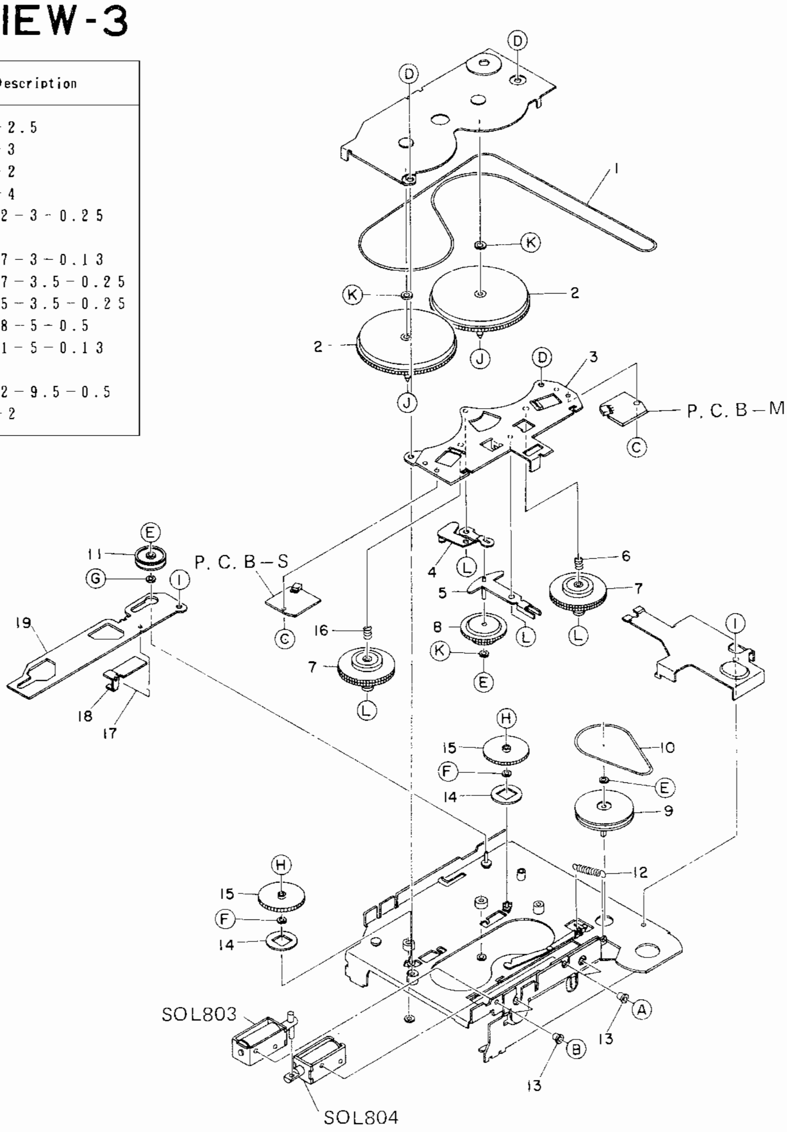

Part No. changed to	Ref. No.	Part No.	Description	Common Model	Q'ty
	3-1	82-685-381	BELT, DRIVE		1
	3-2	82-685-379	FLYWHEEL Ass'y 30		2
	3-3	★82-685-373	BASE, REEL PLATFORM Ass'y		1
	3-4	★82-685-370	LEVER B, PLAY BACK 30		1
	3-5	★82-685-367	RF ARM B Ass'y		1
	3-6	★82-685-491	SPRING A, BACK TENSION		1
	3-7	82-685-362	REEL PLATFORM Ass'y		2
	3-8	82-685-366	GEAR FF/REW Ass'y		1
	3-9	82-685-380	PULLEY, RELAY		1
	3-10	82-685-382	BELT, GEAR		1
	3-11	82-685-359	PULLEY, DOWN Ass'y		1
	3-12	★82-685-494	SPRING, C-CAM STOPPER		1
	3-13	★82-685-521	S METAL		4
	3-14	★82-685-405	WASHER, IDLER		2
	3-15	82-685-404	GEAR, IDLER 30		2
	3-16	★82-685-492	SPRING B, BACK TENSION		1
	3-17	★82-685-490	SPRING, SELECT RESETTER 30		1
	3-18	★82-685-408	LEVER, C-SWITCH 30		1
	3-19	★82-685-402	LEVER, SELECT 30		1

■ACCESSORIES/PACKAGE LIST

Part No. changed to	Ref. No.	Part No.	Description	Common Model	Q'ty	
	1	★84-415-904	INSTRUCTION BOOKLET (Y ONLY)	※	1	
	2	★84-415-905	INSTRUCTION BOOKLET (YU ONLY)	※	1	
	3	★82-685-236	METAL FITTING		1	
	4	★84-415-201	CASE DIN Ass'y	※	1	
	5	★87-501-239	VF+5-12		1	
	6	★87-067-157	NF 5-12-5.5 (CT-Z550, CT-X500 ONLY)		1	
	7	★87-501-239	VF 5-12 (CT-Z550, CT-X500 ONLY)		1	

AIWA Co., Ltd. Tokyo Japan

Printed in Japan